CASANOOV

SIERRA 100P160

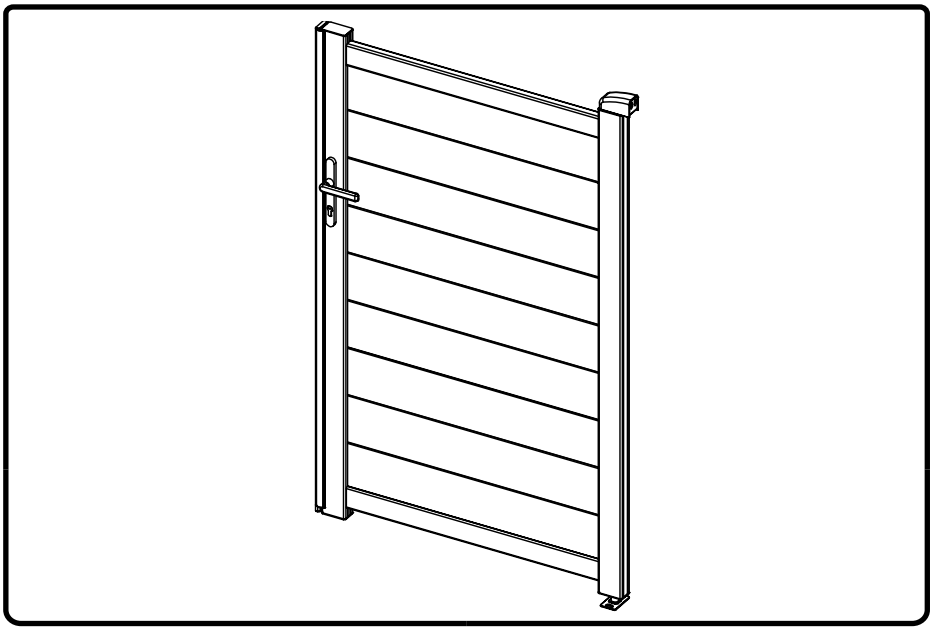

3-5H

X 2

EN FR DE ES PT IT NL PL FI SE DK

RO SI SK HU CZ HR GR LT LV

INSTRUCTION MANUAL / NOTICE DE MONTAGE / MONTAGEANLEITUNG / MANUAL DE MONTAJE / MANUAL DE MONTAGEM / MANUALE DI MONTAGGIO / MONTAGEHANDLEIDING / NSTRUKCJA MONTAŻU / KÄYTTÖOHJEET / BRUKSANVISNING / BRUGSANVISNING / INSTRUCȚIUNI DE ASAMBLARE / NAVODILA ZA SESTAVLJANJE / NÁVOD NA MONTÁŽ / ÖSSZESZERELÉSI ÚTMUTATÓ / NÁVOD K MONTÁŽI / UPUTE ZA INSTALACIJU / ΟΔΗΓΙΕΣ ΣΥΝΑΡΜΟΛΟΓΗΣΗΣ / SURINKIMO INSTRUKCIJOS / MONTĀŽAS INSTRUKCIJAS

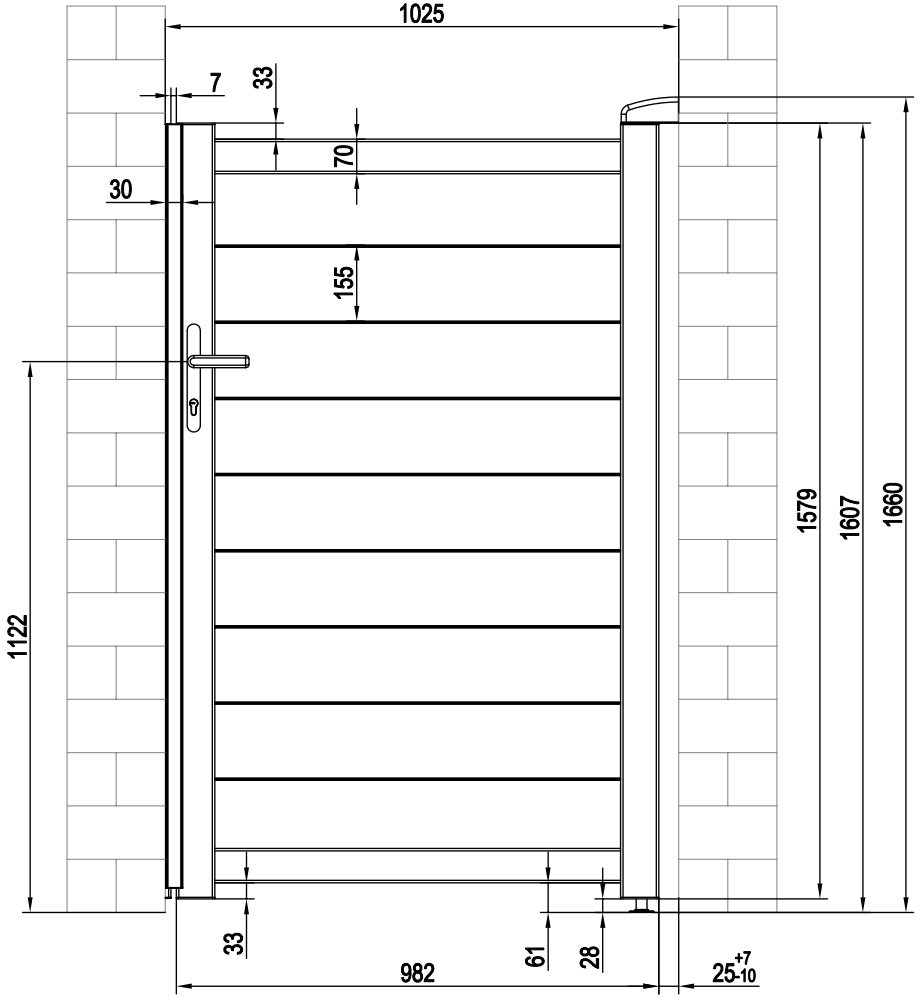
1025
7
33
70
30
155
1122
1579
1607
1660
33
982
61
28
25+7-10

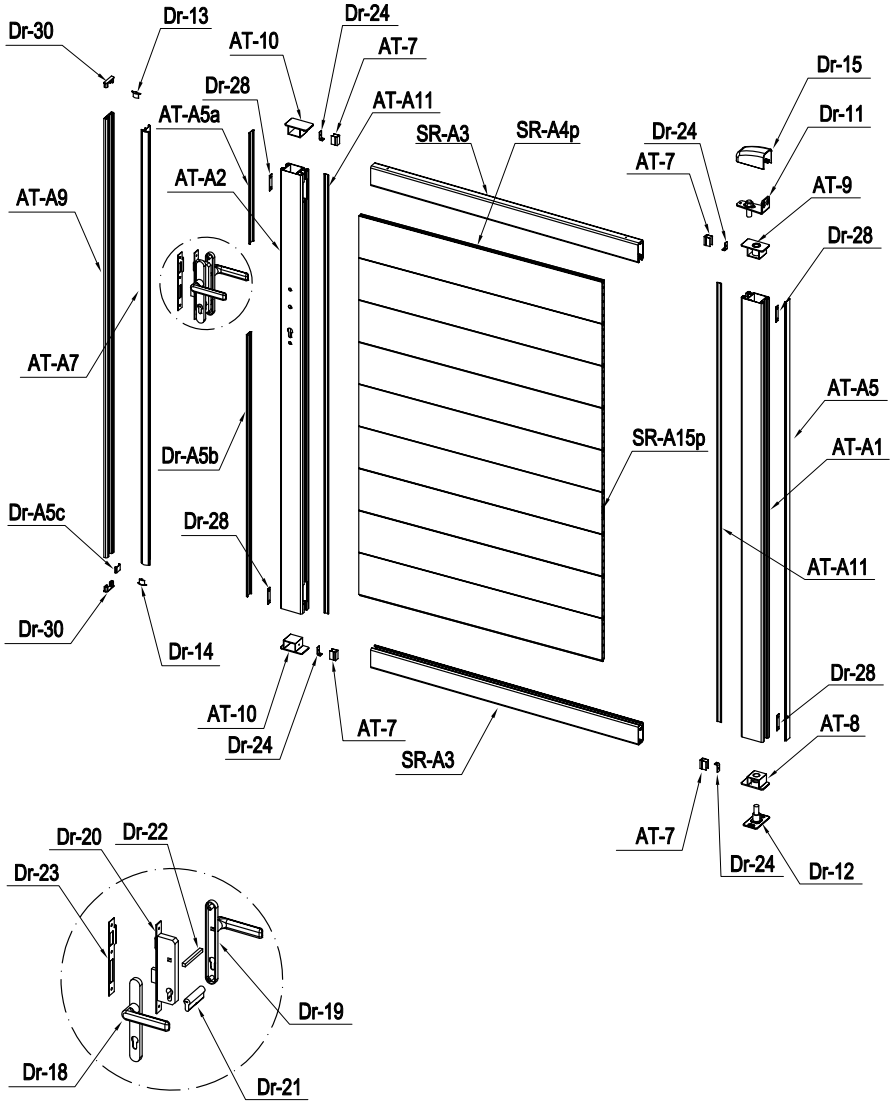
Dr-30
Dr-13
AT-10
Dr-24
AT-7
Dr-28
AT-A11
AT-A5a
SR-A3
SR-A4p
Dr-24
AT-7
Dr-15
Dr-11
AT-9
AT-A9
AT-A2
Dr-28
AT-A7
AT-A5
SR-A15p
AT-A1
Dr-A5b
Dr-A5c
Dr-28
AT-A11
Dr-30
Dr-14
Dr-28
AT-10
AT-7
AT-8
Dr-24
SR-A3
AT-7
Dr-24
Dr-12
Dr-20
Dr-22
Dr-23
Dr-19
Dr-18
Dr-21

CASANOOV

PART LIST

IMAGE	NO.	L.(mm)	QTY
	AT-A1	1573	1
	AT-A2	1573	1
	AT-A9	1573	1
	SR-A3	959	2
	SR-A4p	868	9
	SR-A15p	867	2
	AT-A5	1573	1
	AT-A5a	395.5	1
	Dr-A5b	937	1
	Dr-A5c	19.5	1
	AT-A11	1573	2
	AT-7	29.5	4
	AT-A7	1553	1
	AT-8		1
	AT-9		1
	AT-10		2
	Dr-11		1
	Dr-12		1
	Dr-13		1
	Dr-14		1
	Dr-15		1
	Dr-17		1

IMAGE	NO.	L.(mm)	QTY
	Dr-30		2
	Dr-31		2
	Dr-18		1
	Dr-19		1
	Dr-20		1
	Dr-21		1
	Dr-22		1
	Dr-23		1
	Dr-24		4
	Dr-25		1
	Dr-25a		2
	Dr-26		3
	Dr-27		2
	Dr-28		4
	CK-B30	ST4x10	4
	CK-B31	ST4.2x13	4
	CK-B32	M8x60	6
	CK-B33	ST5.5x38	8
	CK-B34	M6x50	3
	CK-B35	ST4.8x38	36

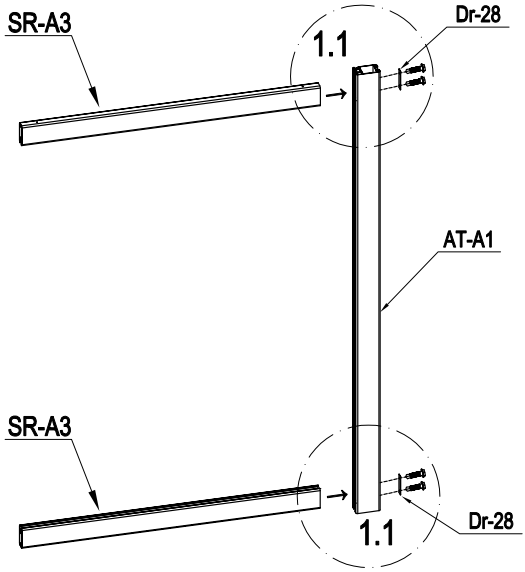

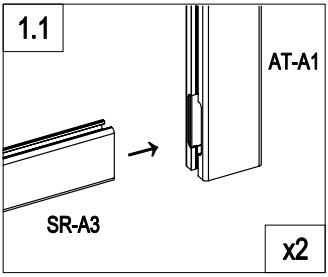

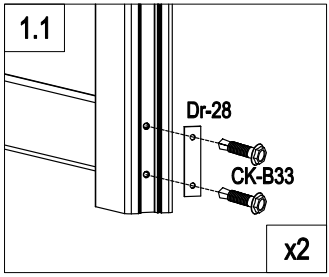

	AT-A1	1
	SR-A3	2
	Dr-28	2
	CK-B33	4

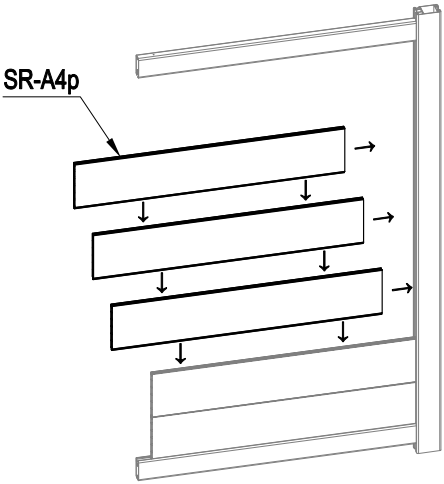

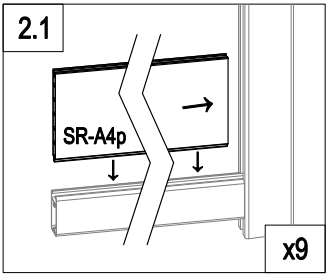

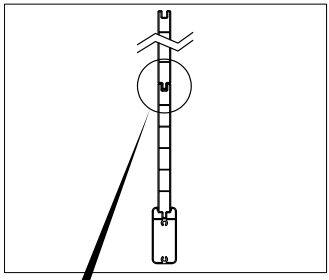

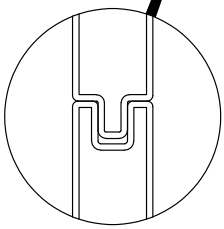

	SR-A4p	9

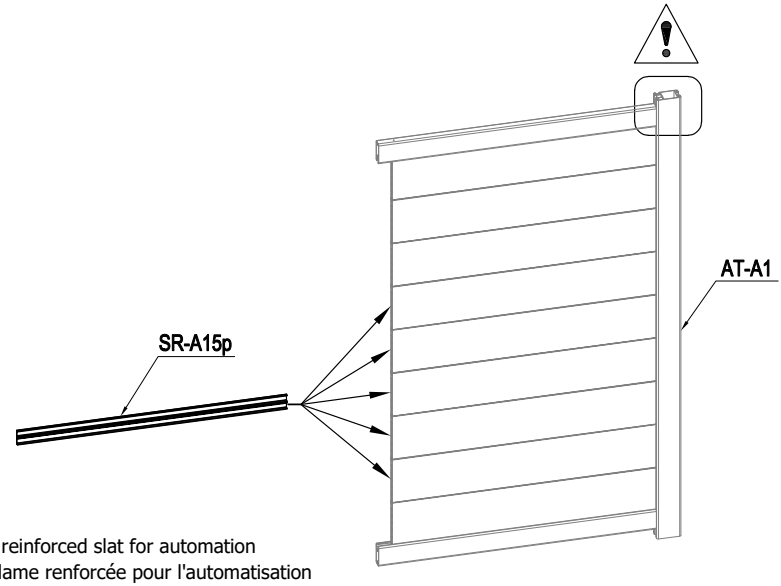

EN: reinforced slat for automation
FR: lame renforcée pour l'automatisation
DE: verstärkte Lamelle für die Automatisierung
ES: Lámina reforzada para la automatización
PT: ripa reforçada para automatização
IT: lamella rinforzata per l'automazione
NL: versterkte lat voor automatisering
PL: wzmocniona listwa do automatyzacji

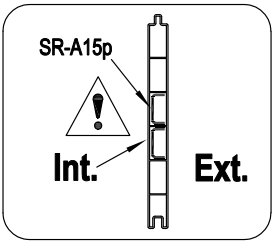

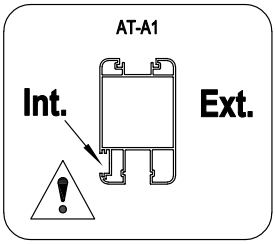

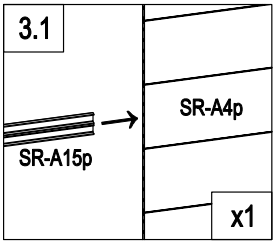

	SR-A15p	2

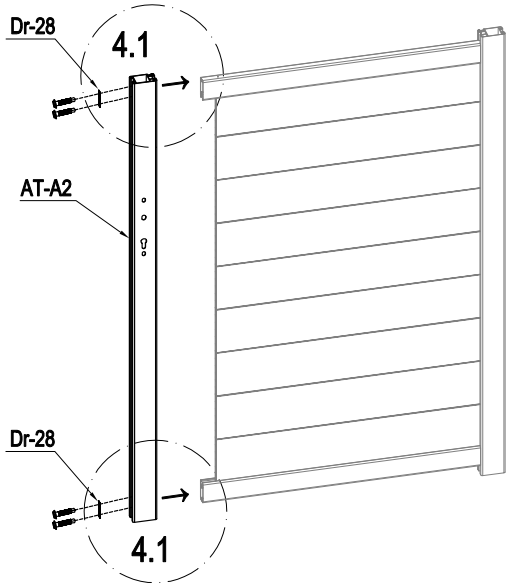

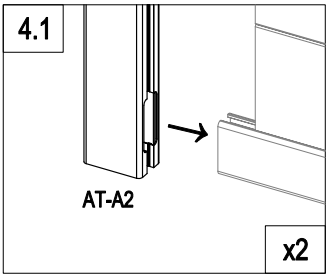

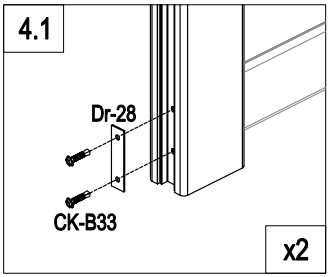

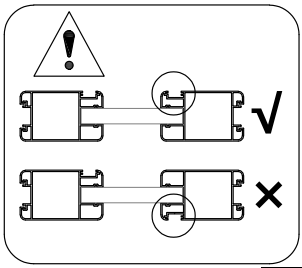

	AT-A2	1
	Dr-28	2
	CK-B33	4

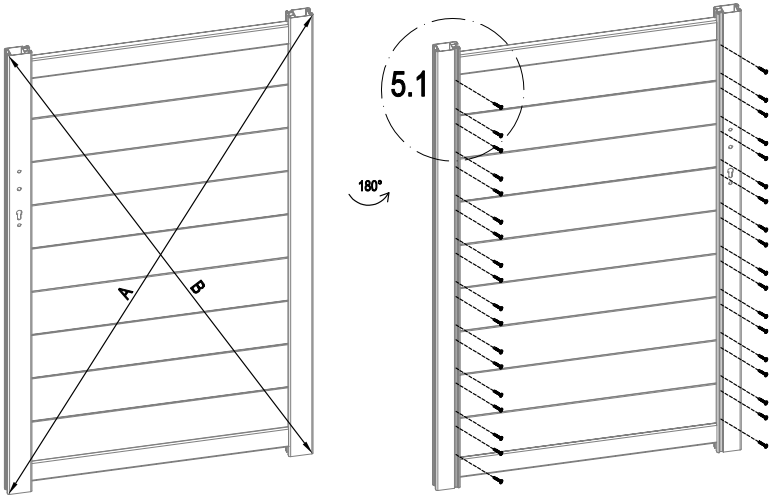

A=B

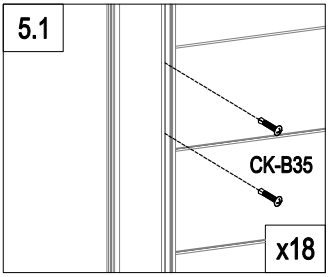

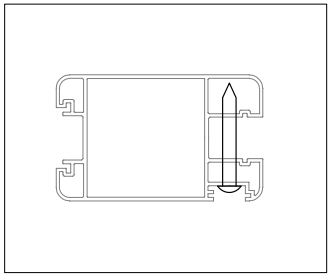

	CK-B35	36

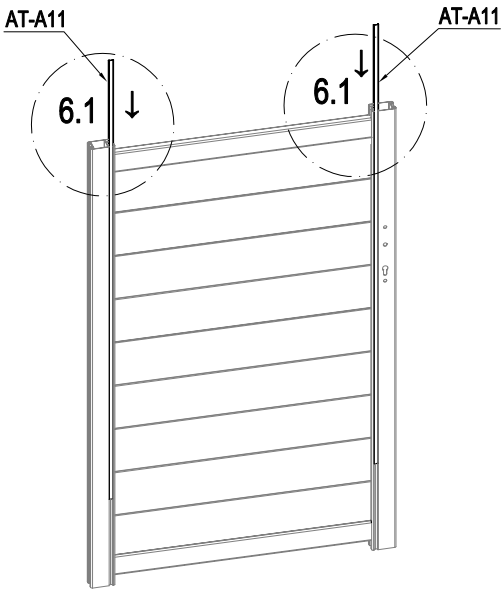

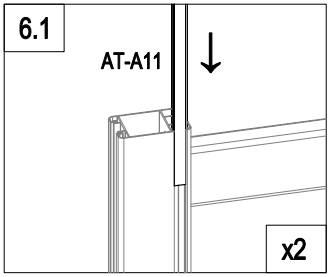

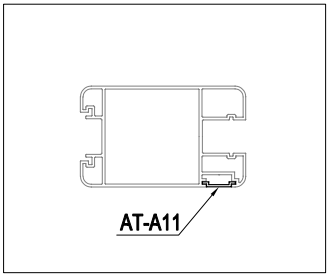

	AT-A11	2

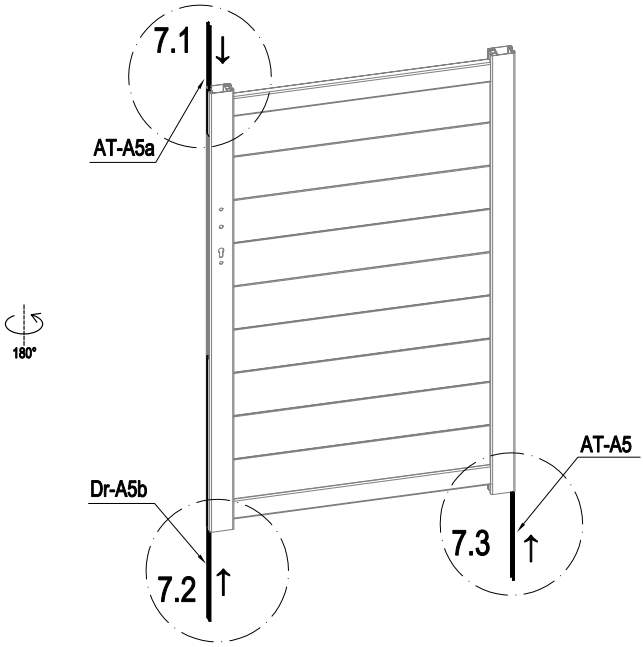

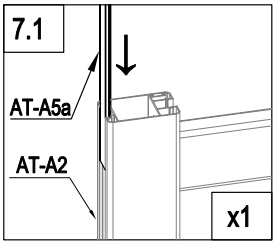

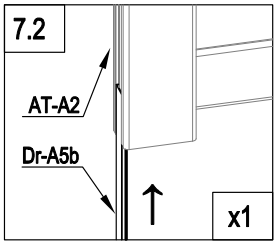

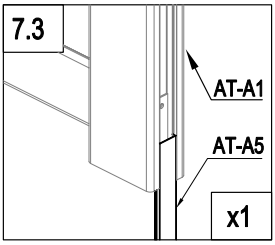

	AT-A5	1
	AT-A5a	1
	Dr-A5b	1

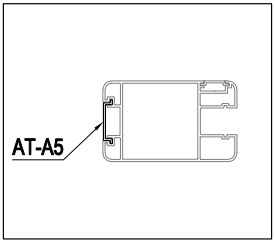

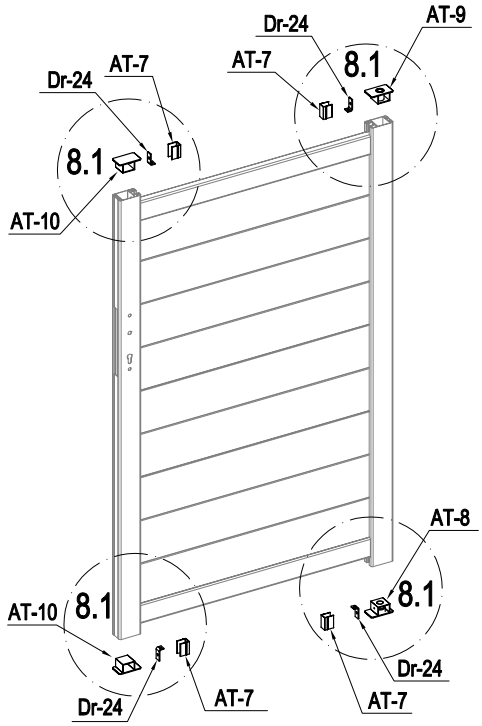

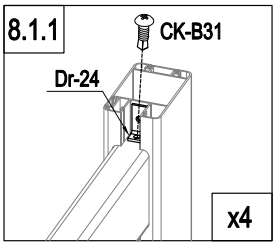

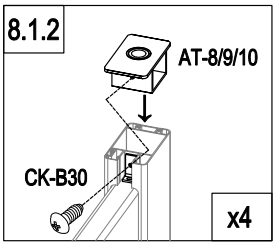

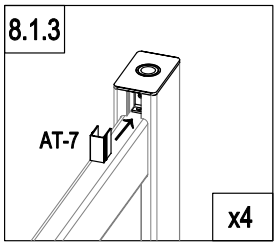

	AT-8	1
	AT-9	1
	AT-10	2
	Dr-24	4

	AT-7	4
	CK-B30	4
	CK-B31	4

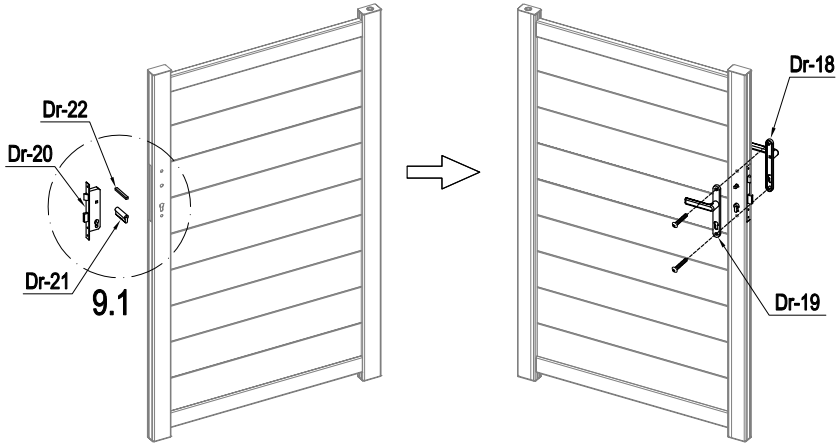

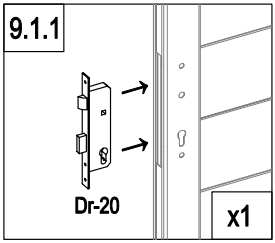

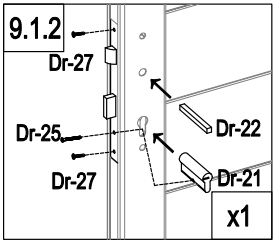

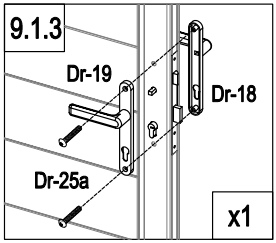

	Dr-20	1
	Dr-21	1
	Dr-22	1
	Dr-25	1

	Dr-18	1
	Dr-19	1
	Dr-25a	2
	Dr-27	2

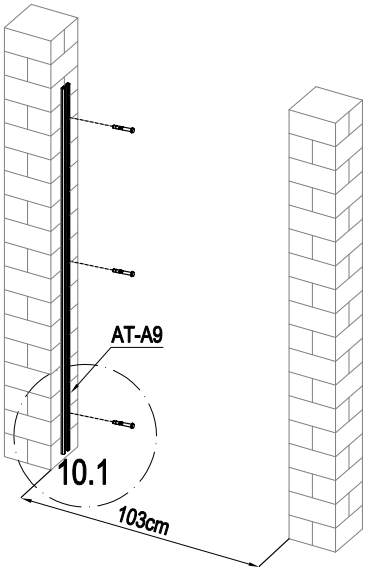

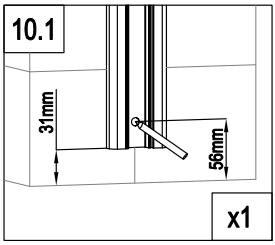

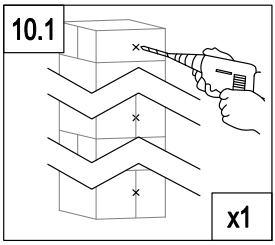

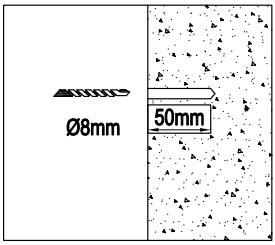

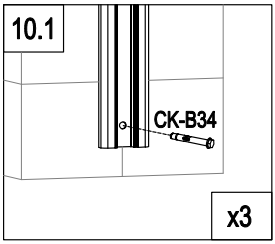

	AT-A9	1
	CK-B34	3

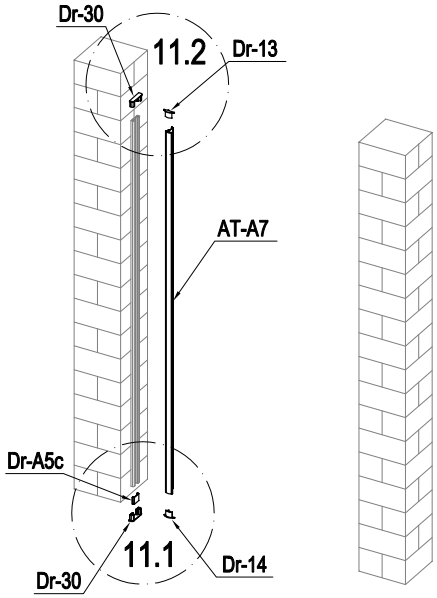

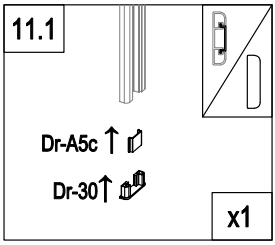

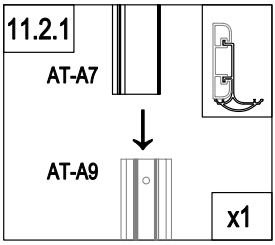

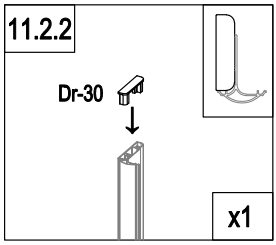

	AT-A7	1
	Dr-13	1
	Dr-14	1
	Dr-30	2
	Dr-A5c	1

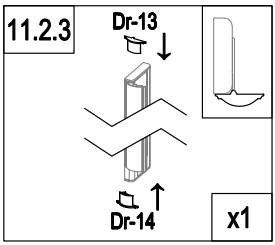

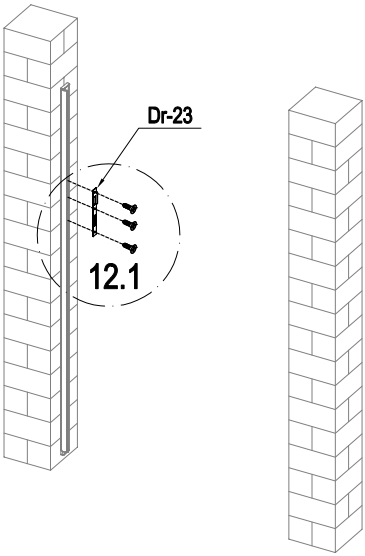

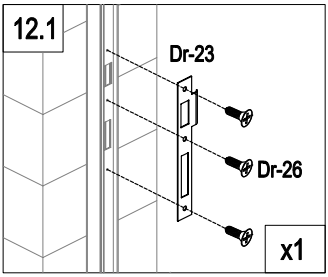

	Dr-23	1
	Dr-26	3

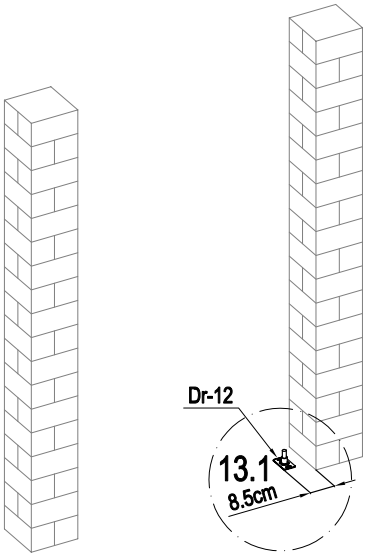

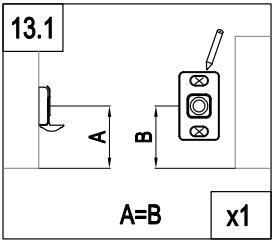

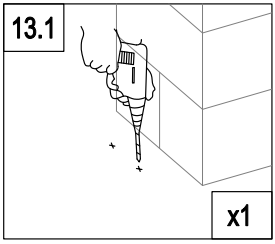

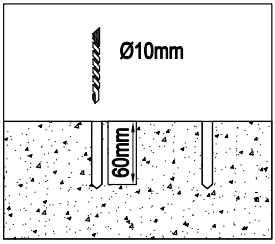

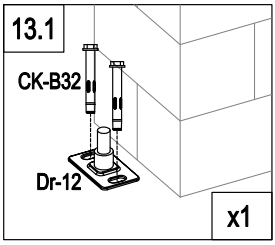

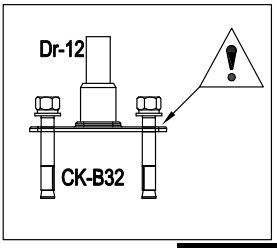

	Dr-12	1
	CK-B32	2

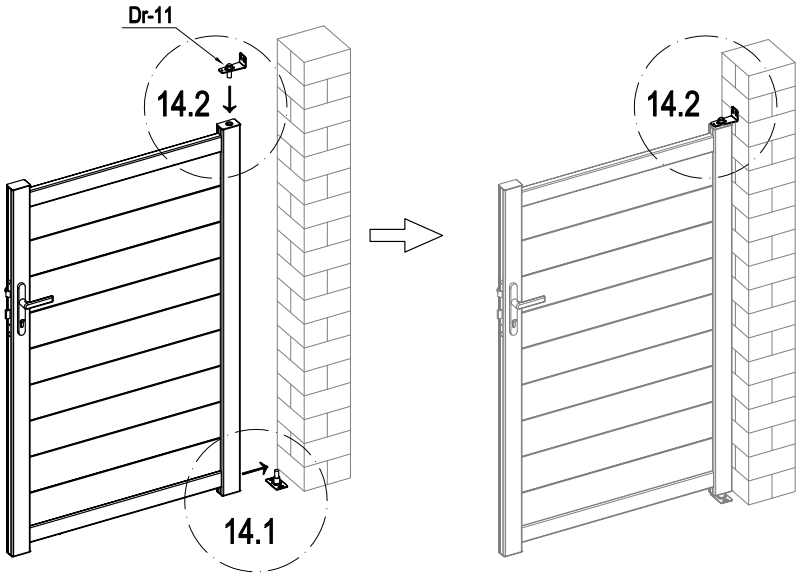

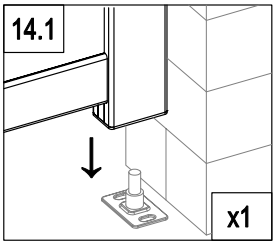

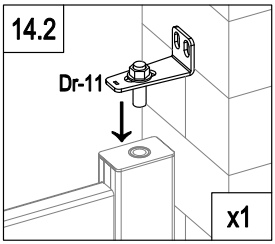

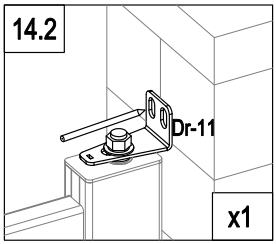

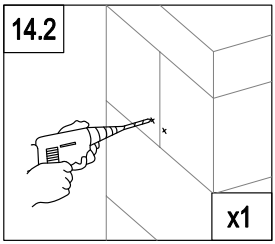

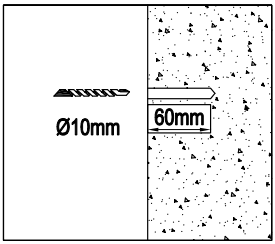

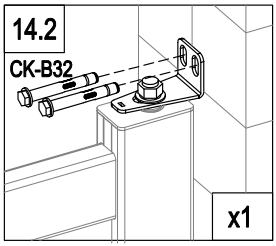

	Dr-11	1
	CK-B32	2

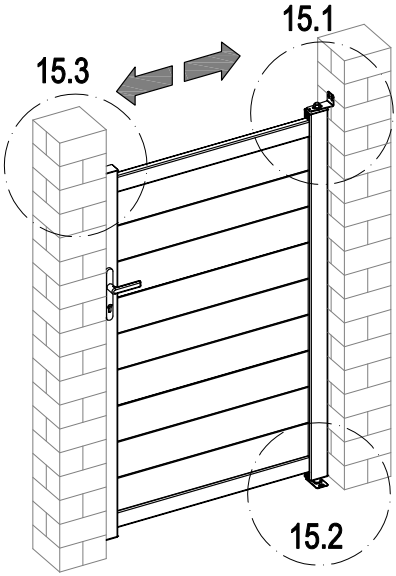
15.1
15.3
15.2

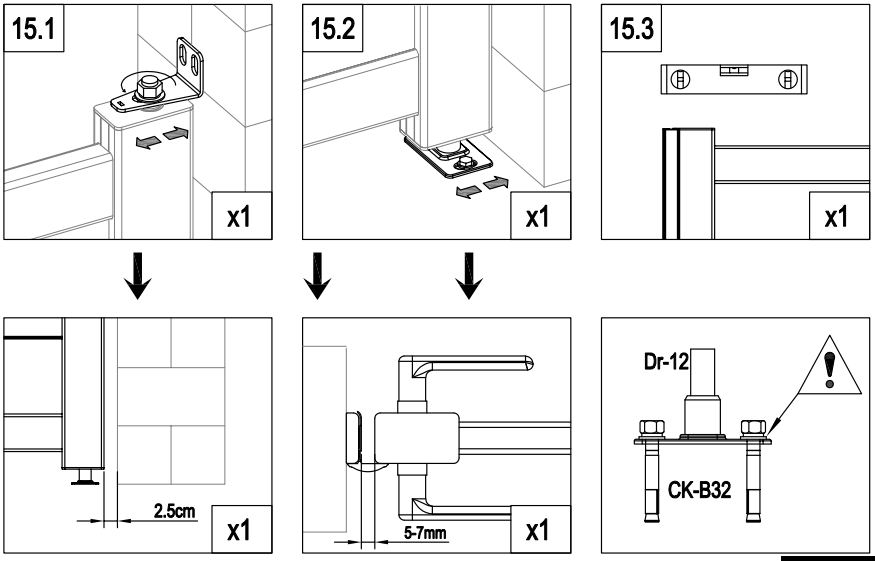
15.1
x1
15.2
x1
15.3
x1
2.5cm
x1
5-7mm
x1
Dr-12
CK-B32

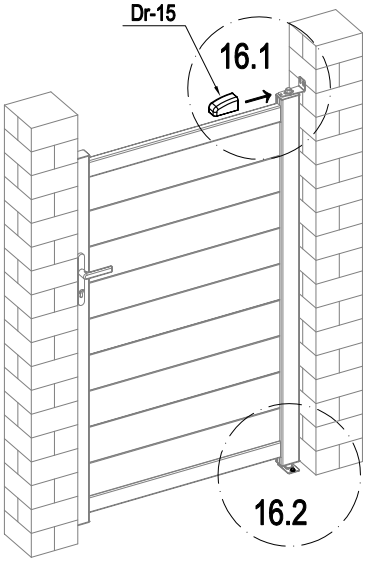

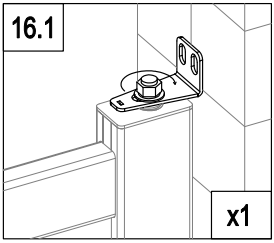

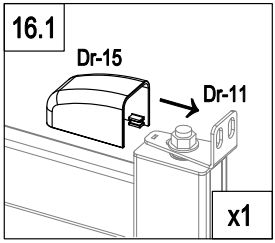

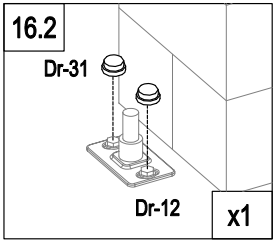

	Dr-15	1
	Dr-31	2

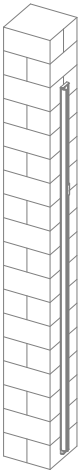

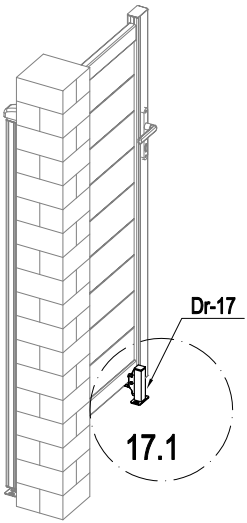

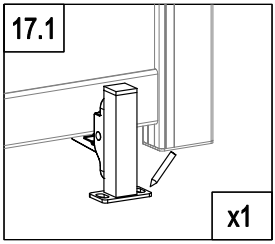

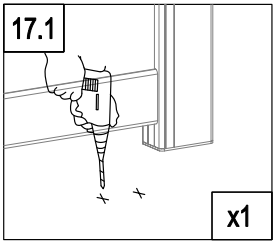

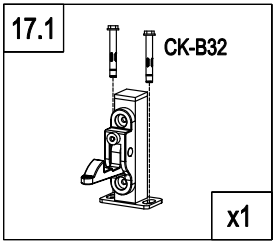

	CK-B32	2
	Dr-17	1