CASANOOV

DO 300C160

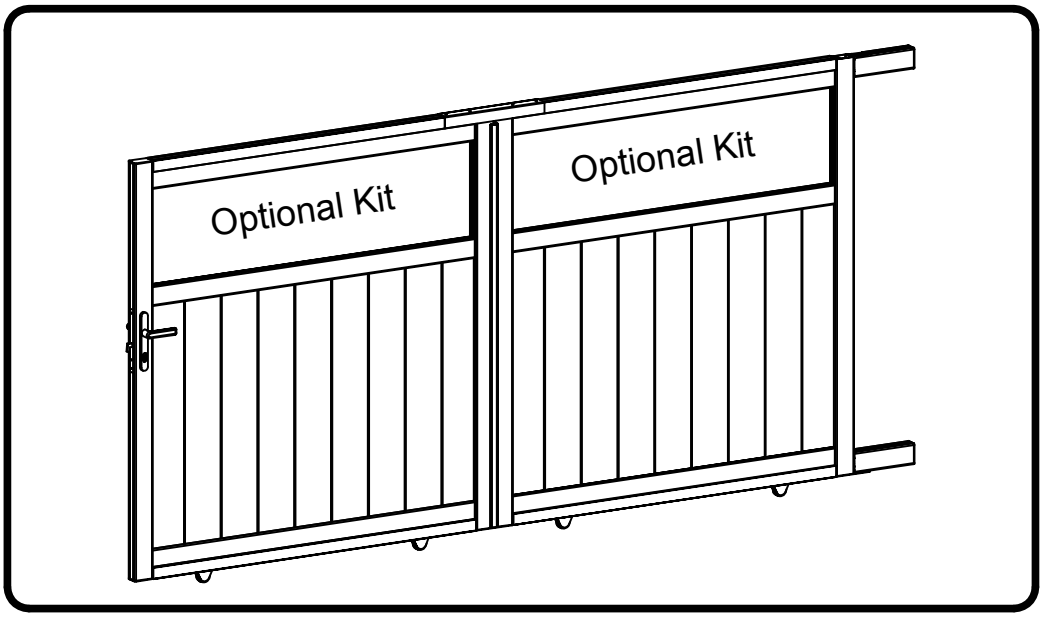

COM-000325	[x1]
COM-000326	[x1]
COM-000327	[x1]
COM-000*DESIGN*	[x1]

*Selon modèle

FR EN ES DE IT NL PL PT FI SE DK CE

NOTICE DE MONTAGE / INSTRUCTION MANUAL / MANUAL DE MONTAJE / MONTAGEANLEITUNG / MANUALE DI MONTAGGIO / MONTAGEHANDLEIDING / INSTRUKCJA MONTAŻU

Ext.

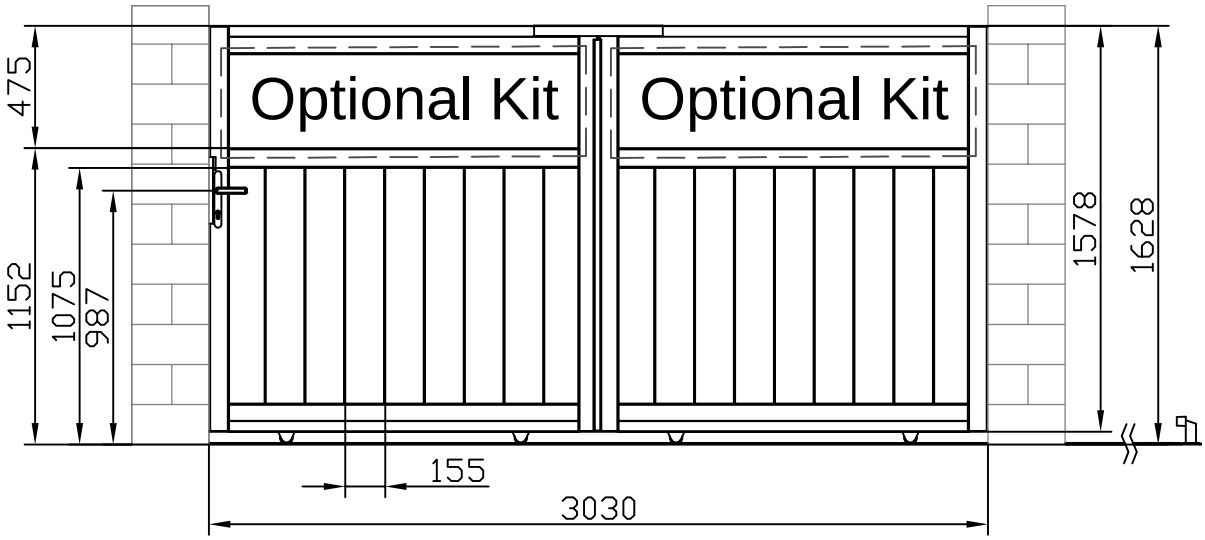
Optional Kit
Optional Kit
475
1152
1075
987
1578
1628
155
3030

Int.

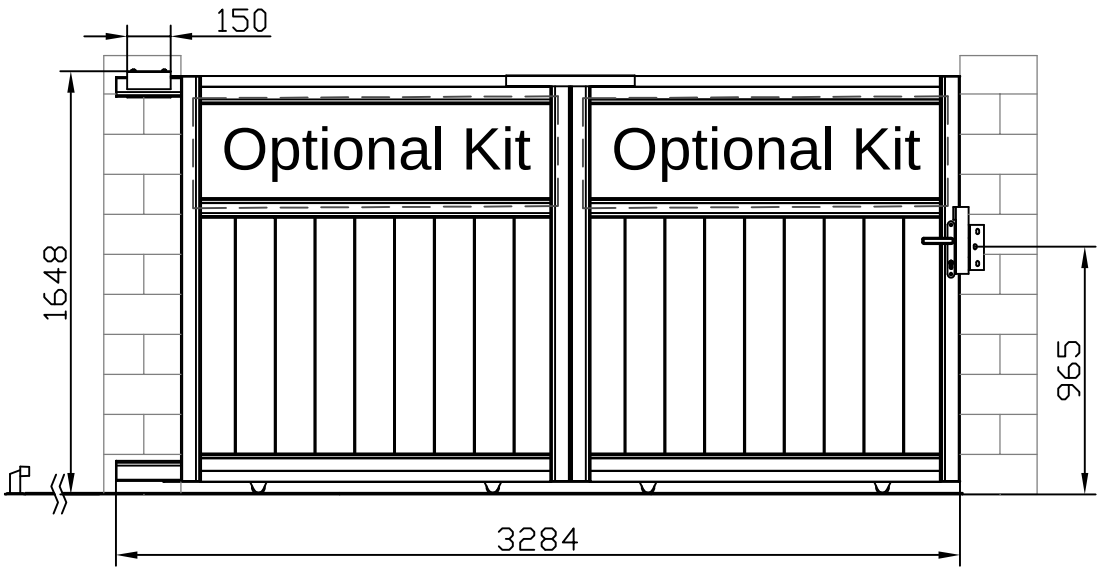
150
Optional Kit
Optional Kit
1648
965
3284

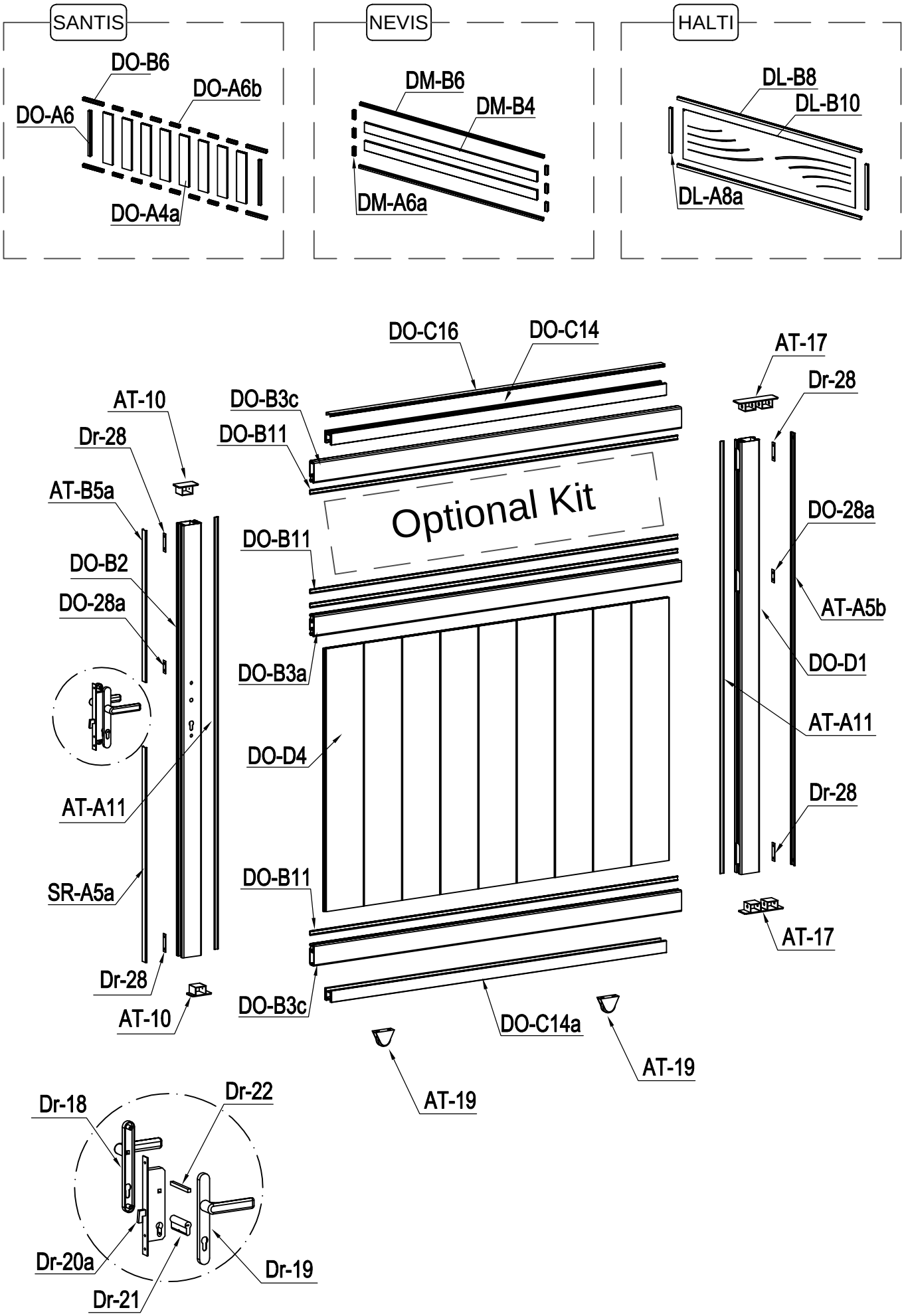
SANTIS
DO-B6
DO-A6b
DO-A6
DO-A4a
NEVIS
DM-B6
DM-B4
DM-A6a
HALTI
DL-B8
DL-B10
DL-A8a
DO-C16
DO-C14
AT-17
Dr-28
AT-10
DO-B3c
DO-B11
Dr-28
AT-B5a
Optional Kit
DO-28a
DO-B11
DO-B2
DO-28a
AT-A5b
DO-B3a
DO-D1
AT-A11
DO-D4
Dr-28
AT-A11
DO-B11
SR-A5a
AT-17
Dr-28
AT-10
DO-B3c
DO-C14a
AT-19
AT-19
Dr-18
Dr-22
Dr-20a
Dr-19
Dr-21

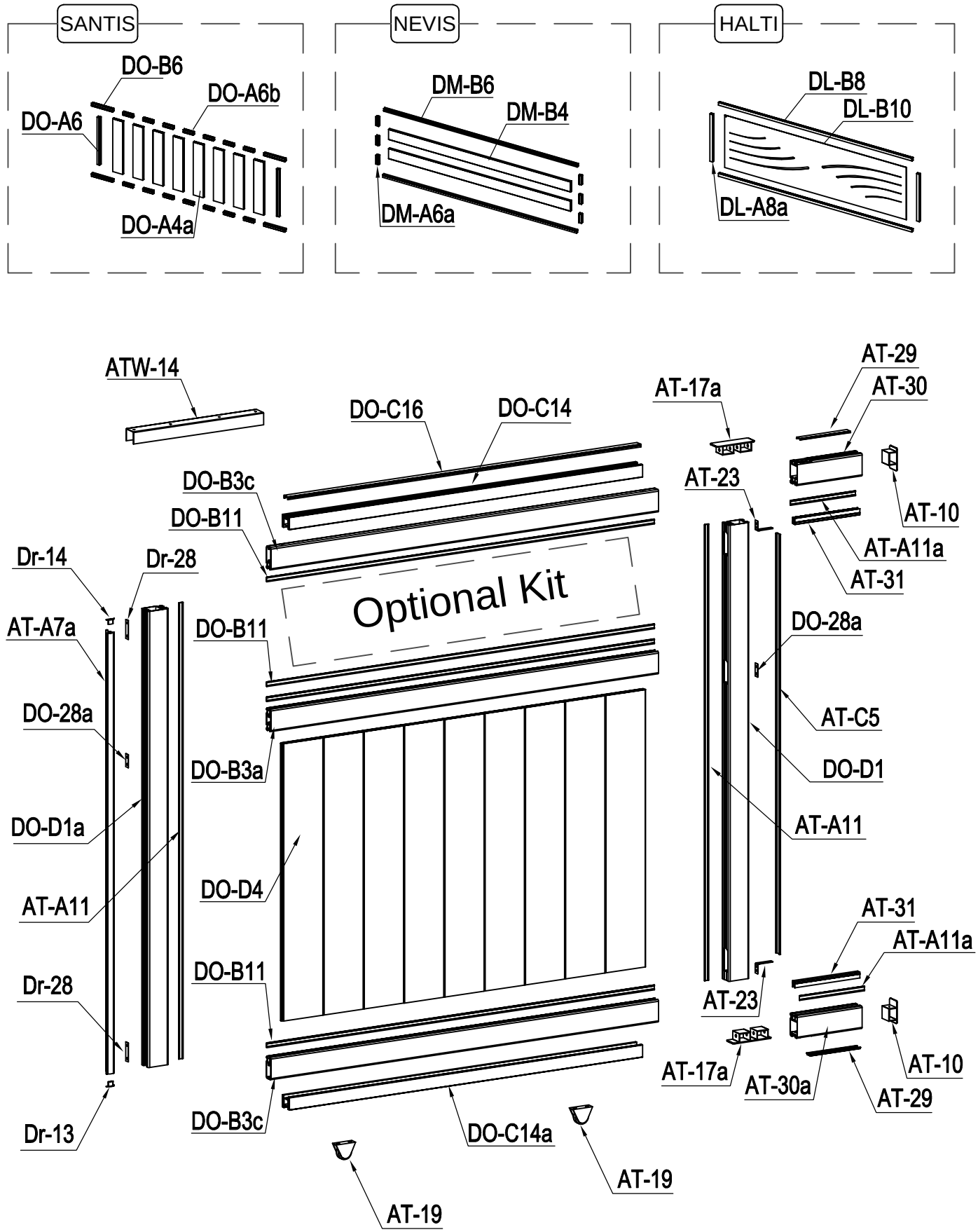
SANTIS
DO-B6
DO-A6b
DO-A6
DO-A4a
NEVIS
DM-B6
DM-B4
DM-A6a
HALTI
DL-B8
DL-B10
DL-A8a
ATW-14
DO-C16
DO-C14
AT-17a
AT-29
AT-30
AT-23
AT-10
DO-B3c
DO-B11
AT-A11a
AT-31
Dr-14
Dr-28
Optional Kit
AT-A7a
DO-B11
DO-28a
DO-28a
AT-C5
DO-B3a
DO-D1
DO-D1a
AT-A11
DO-D4
AT-A11
AT-31
AT-A11a
DO-B11
Dr-28
AT-23
AT-17a
AT-30a
AT-10
AT-29
Dr-13
DO-B3c
DO-C14a
AT-19
AT-19

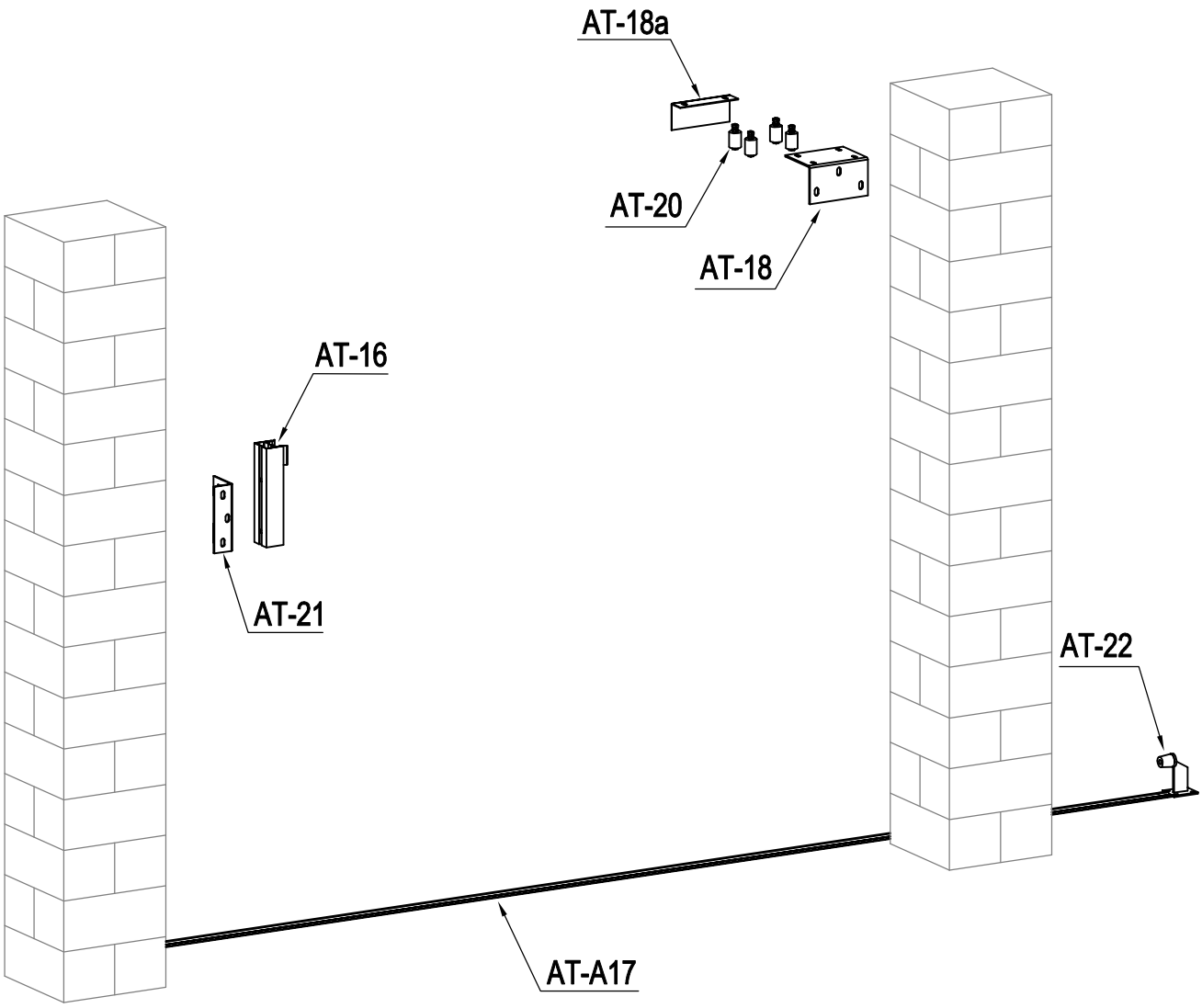
AT-18a
AT-20
AT-18
AT-16
AT-21
AT-22
AT-A17

PARTS LIST

IMAGE	NO.	L.(mm)	QTY
	DO-D1	1573	2
	DO-D1a	1573	1
	DO-B2	1573	1
	AT-30	250	1
	AT-30a	250	1
	DO-B3c	1492	4
	DO-B3a	1492	2
	DO-D4	957	18
	AT-A5b	1573	1
	AT-C5	1448	1
	AT-B5a	550.5	1
	SR-A5a	782	1
	AT-29	193	2
	AT-A11	1573	4
	AT-A11a	250	2
	DO-B11	1492	8
	AT-31	250	2
	AT-A7a	1520	1
	DO-C14	1358	2
	DO-C14a	1358	2
	DO-C16	1357	2
	AT-16		1
	AT-A17	1212	5
	AT-17		2
	AT-17a		2
	AT-10		4
	Dr-13		1
	Dr-14		1
	DO-30		8
	AT-18		1

IMAGE	NO.	L.(mm)	QTY
	AT-18a		1
	ATW-14		1
	AT-19		4
	AT-20		4
	AT-21		1
	AT-22		1
	AT-23		2
	Dr-18		1
	Dr-19		1
	Dr-20a		1
	Dr-21		1
	Dr-22		1
	Dr-25		1
	Dr-25a		2
	Dr-27		2
	Dr-28		6
	DO-28a		4
	AT-22J		7
	DO-F30		4
	DO-F31		36
	DO-F32		16
	DO-F33		10
	DO-F34		40
	DO-F35		42
	DO-F36		2
	DO-F37		8
	DO-F38		4

PARTS LIST (Optional Kit)

COM-000350

IMAGE	NO.	L.(mm)	QTY
	DO-A4a	406	16
	DO-A6	364	4
	DO-B6	163	8
	DO-A6b	77.5	28
	DO-35		32

COM-000353

IMAGE	NO.	L.(mm)	QTY
	DM-B4	1400	4
	DM-B6	1490	4
	DM-A6a	69	12
	DO-32		8

COM-000356

IMAGE	NO.	L.(mm)	QTY
	DL-B8	1490	4
	DL-A8a	364	4
	DL-B10	1397	2
	DO-32		8
	DO-35		16

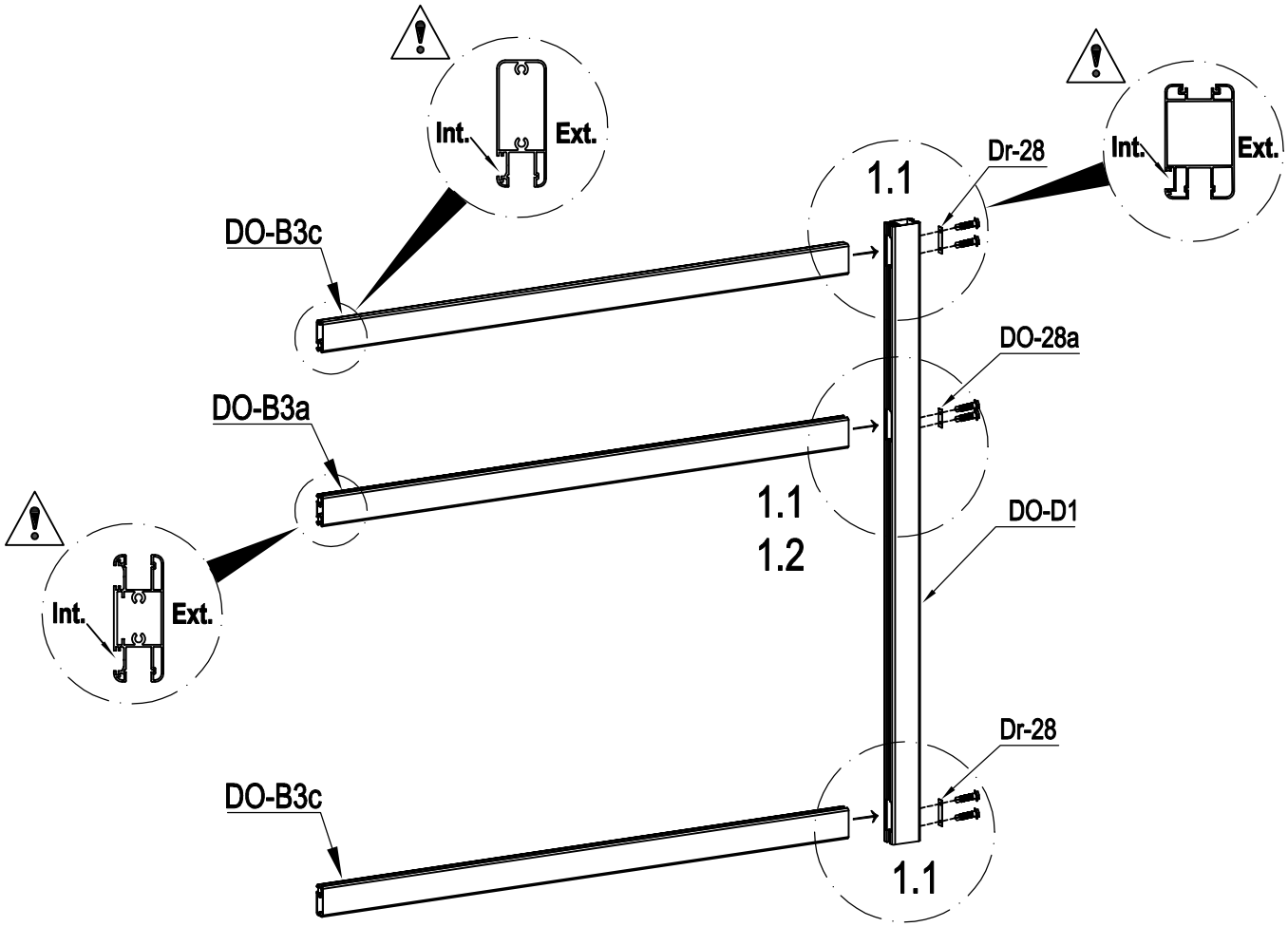

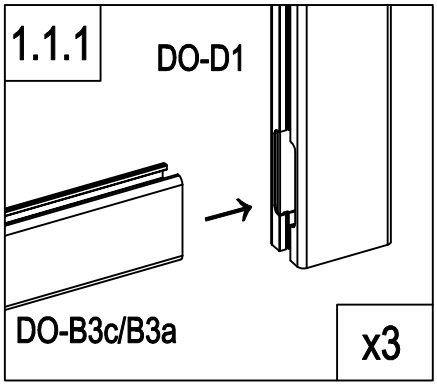

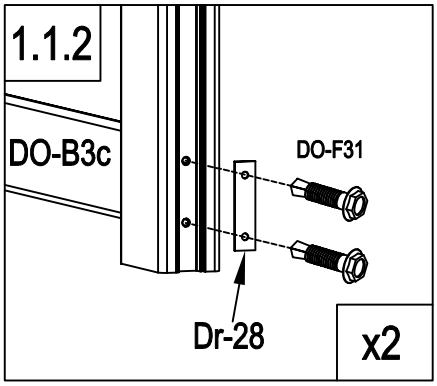

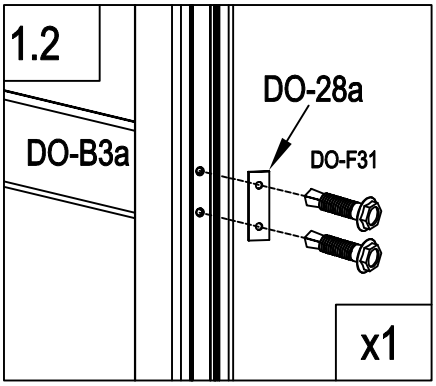

	DO-D1	1
	DO-B3c	2
	DO-B3a	1

	Dr-28	2
	DO-28a	1
	DO-F31	6

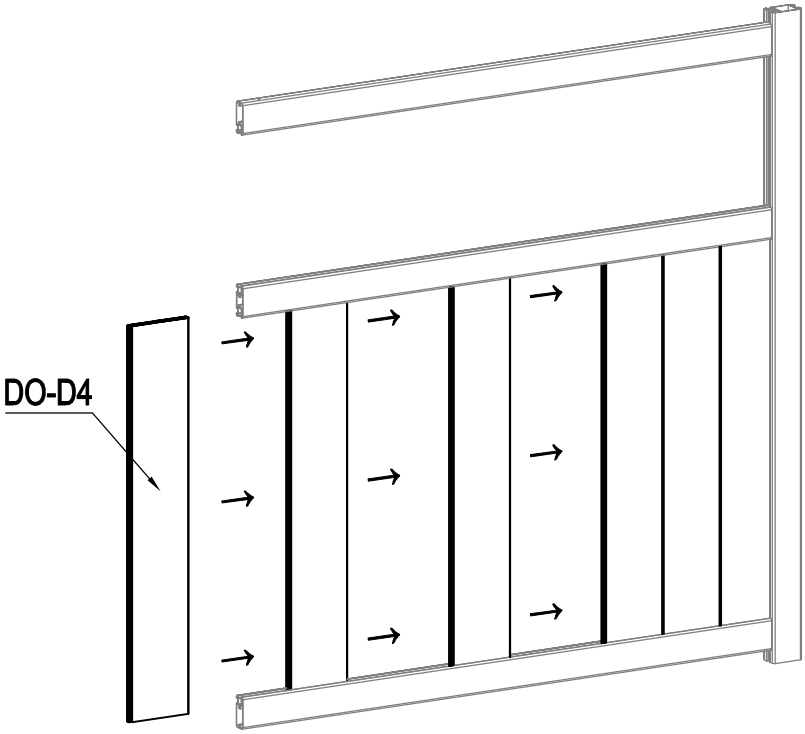

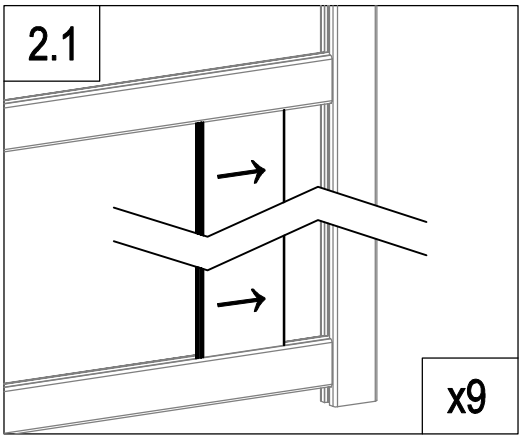

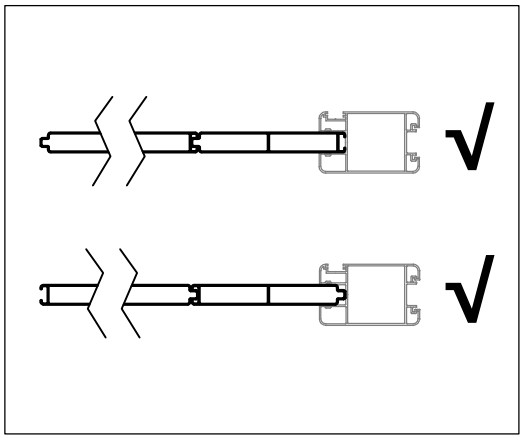

	DO-D4	9

Optional Kit →

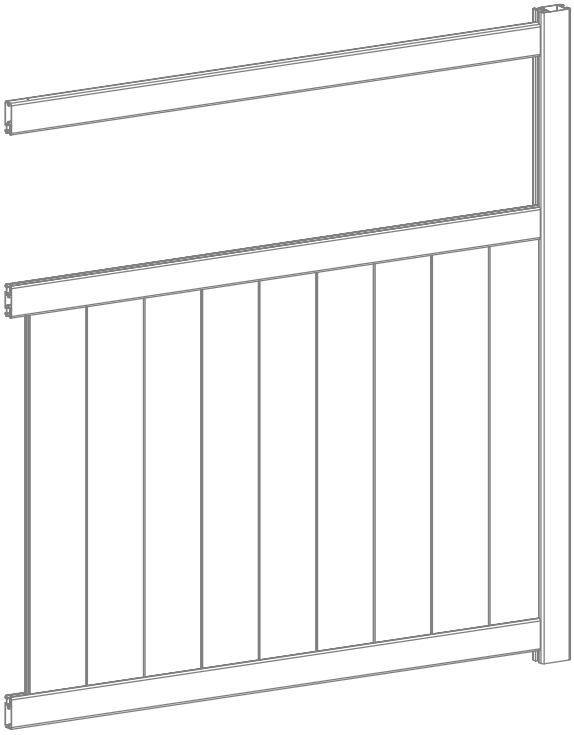

P 4~7

P 8~11

P 12~14

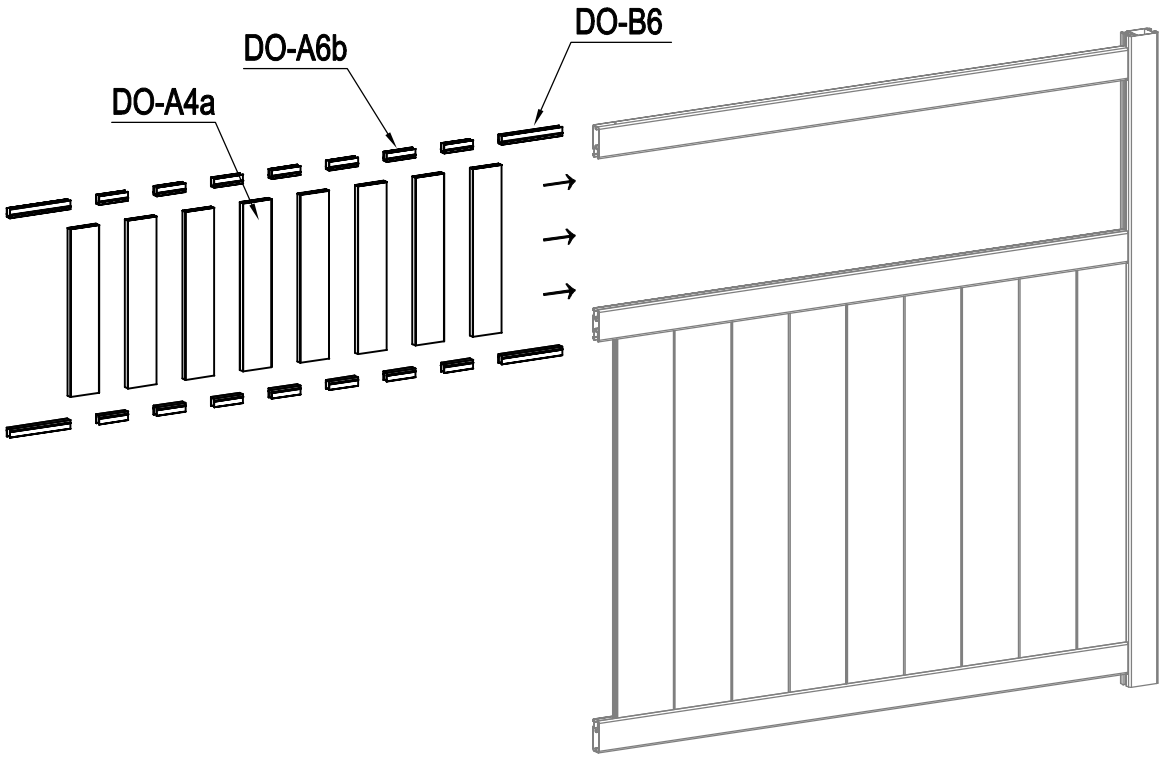

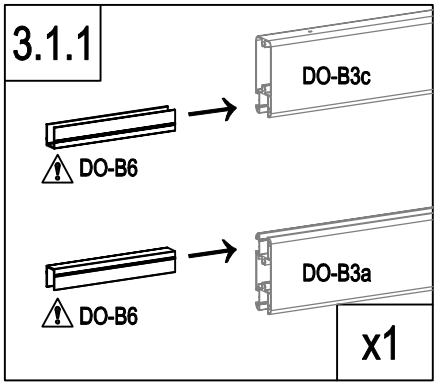

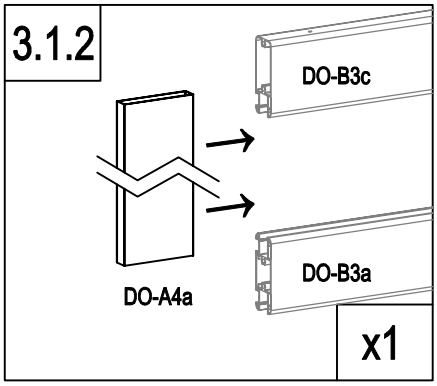

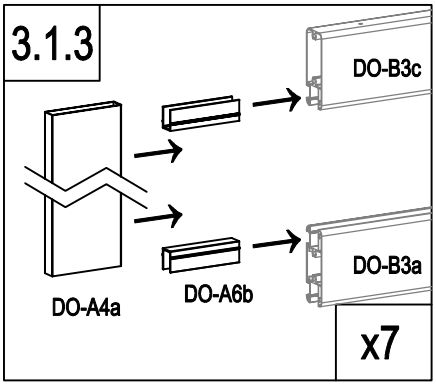

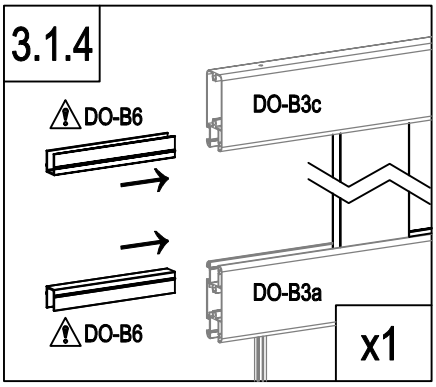

	DO-A4a	406mm	8
	DO-B6	163mm	4
	DO-A6b	77.5mm	14

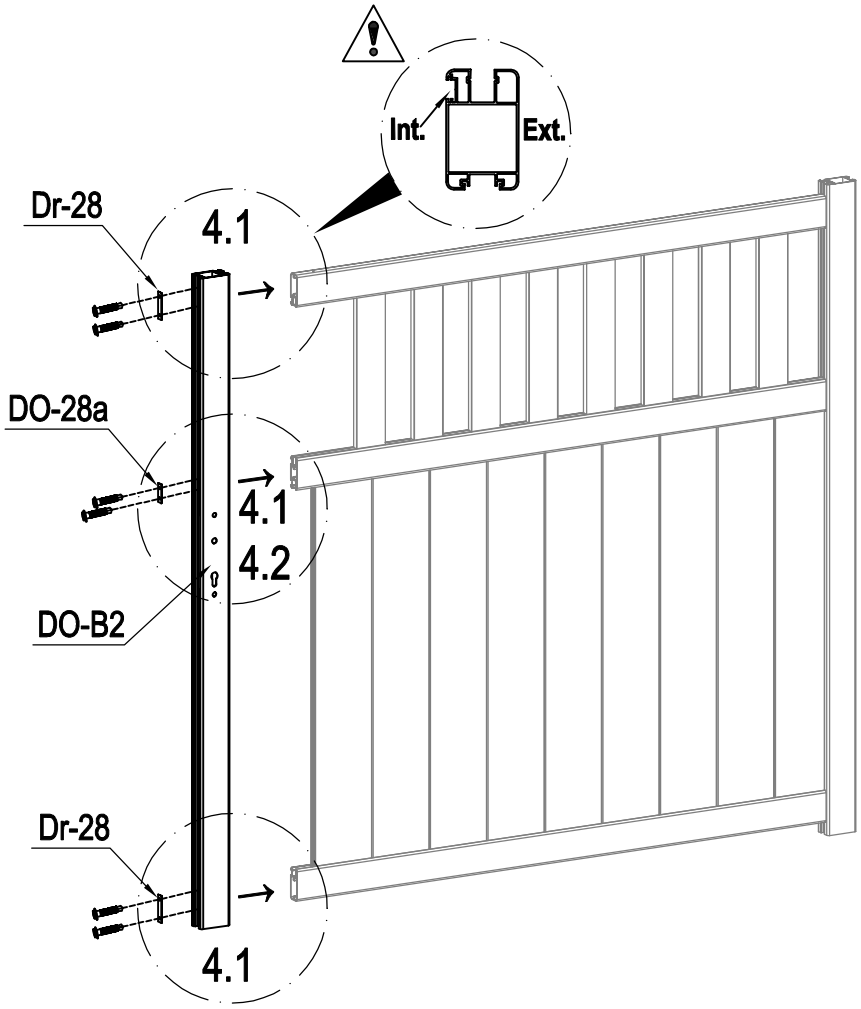

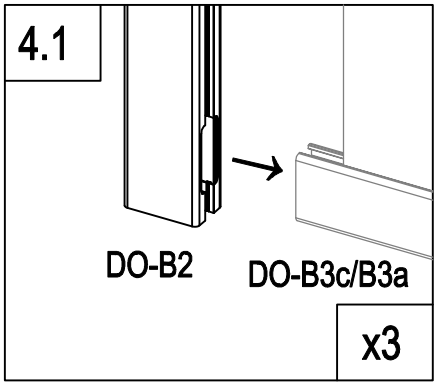

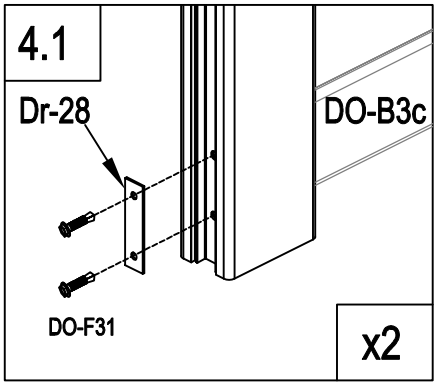

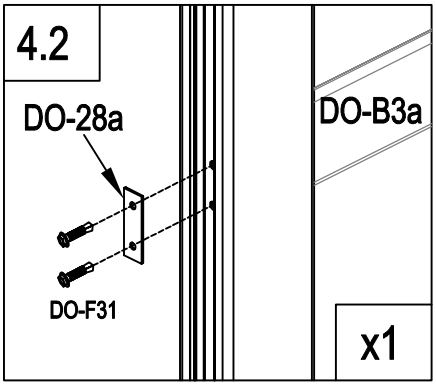

	DO-B2	1
	Dr-28	2
	DO-28a	1
	DO-F31	6

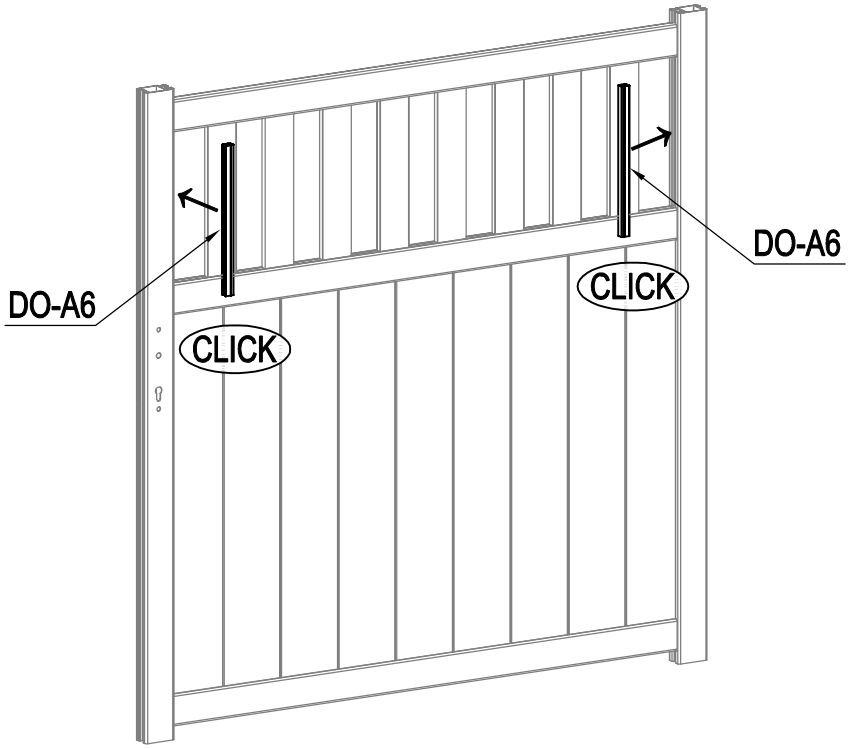

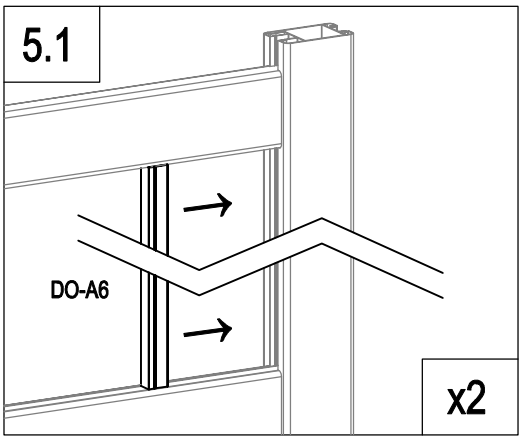

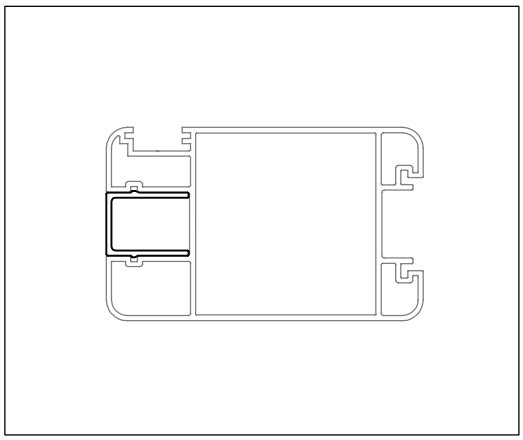

	DO-A6	2

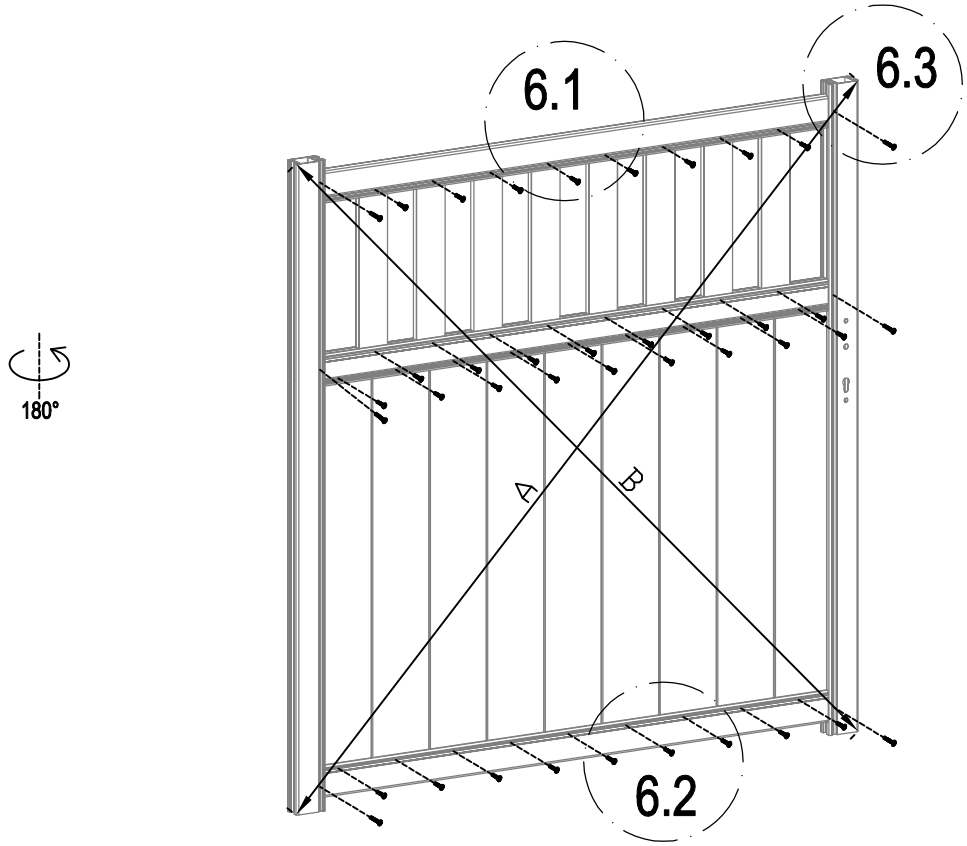

⚠ A=B

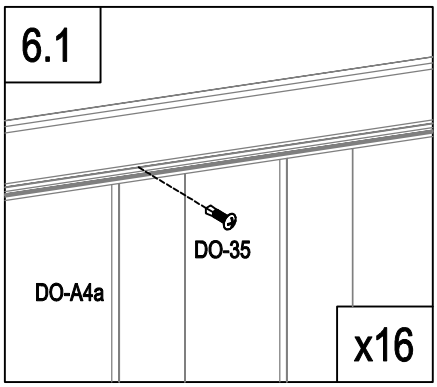

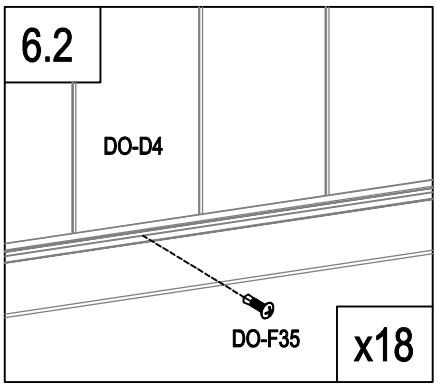

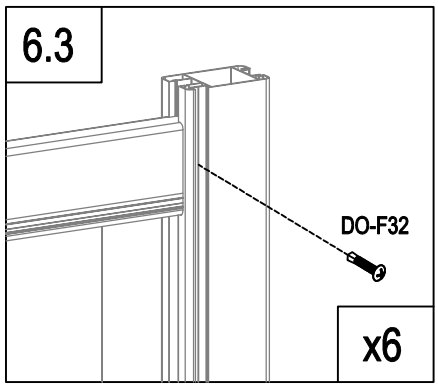

	DO-35	16
	DO-F35	18
	DO-F32	6

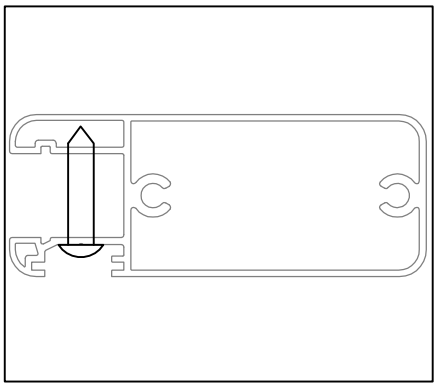

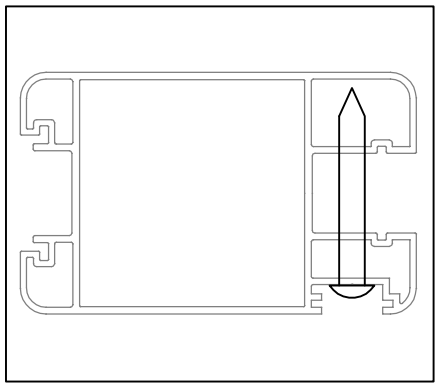

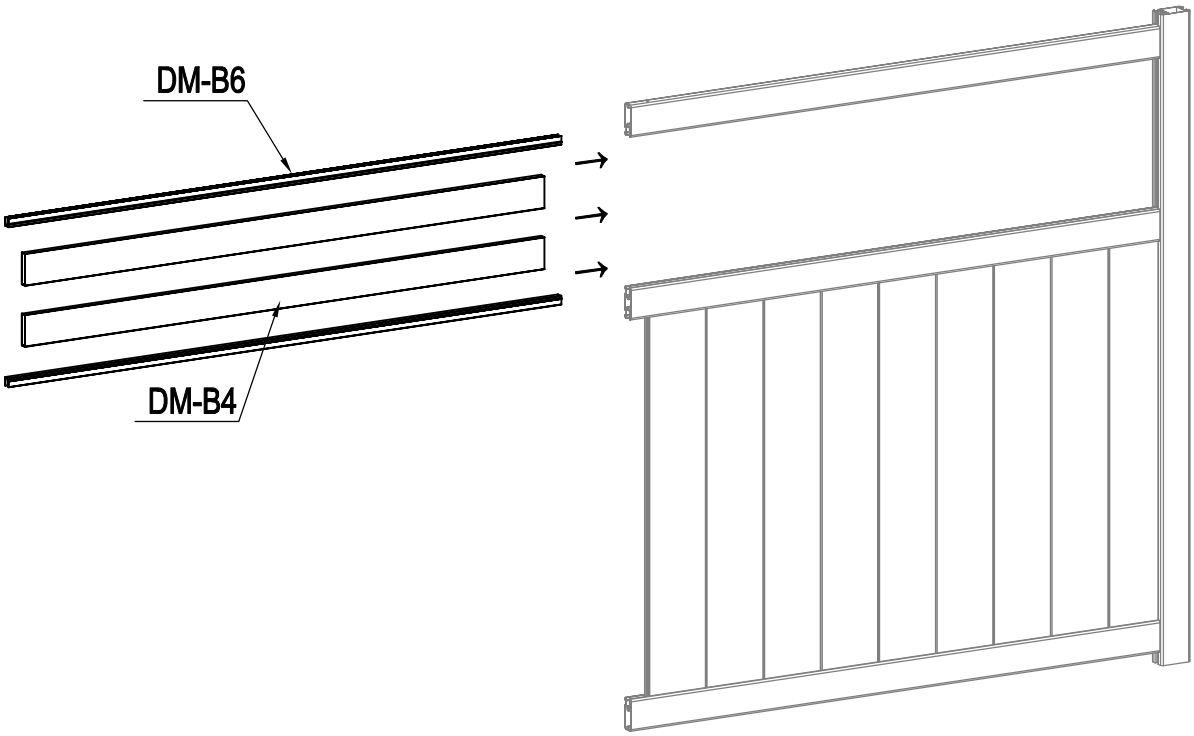

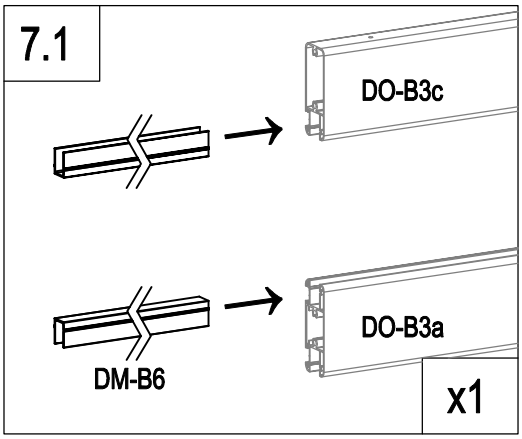

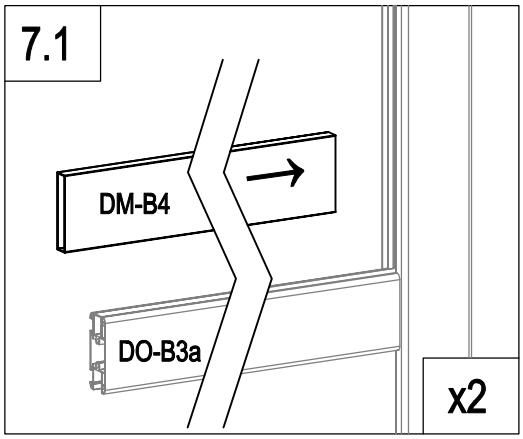

	DM-B4	2
	DM-B6	2

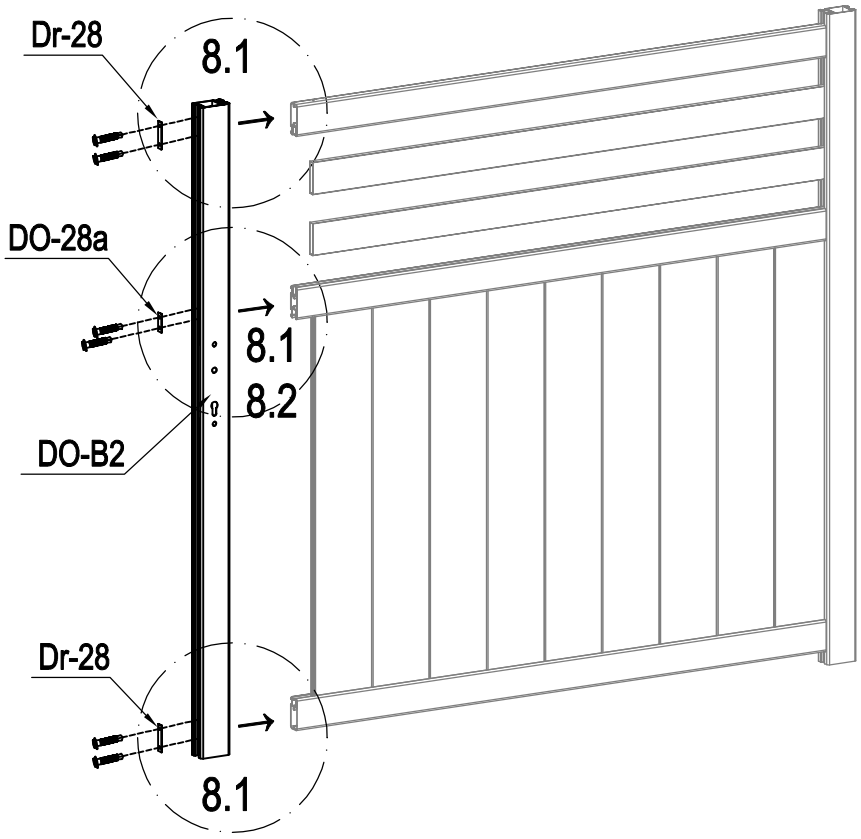

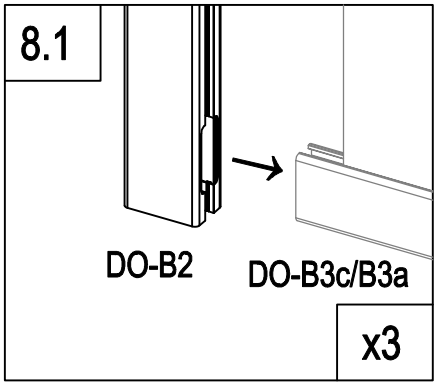

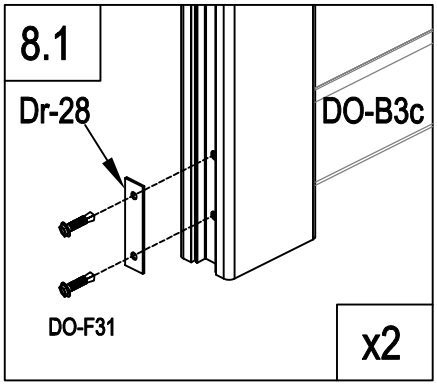

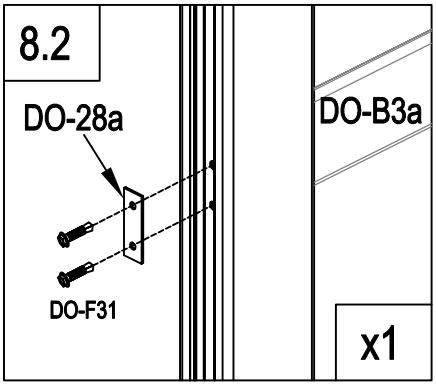

	DO-B2	1
	Dr-28	2
	DO-28a	1
	DO-F31	6

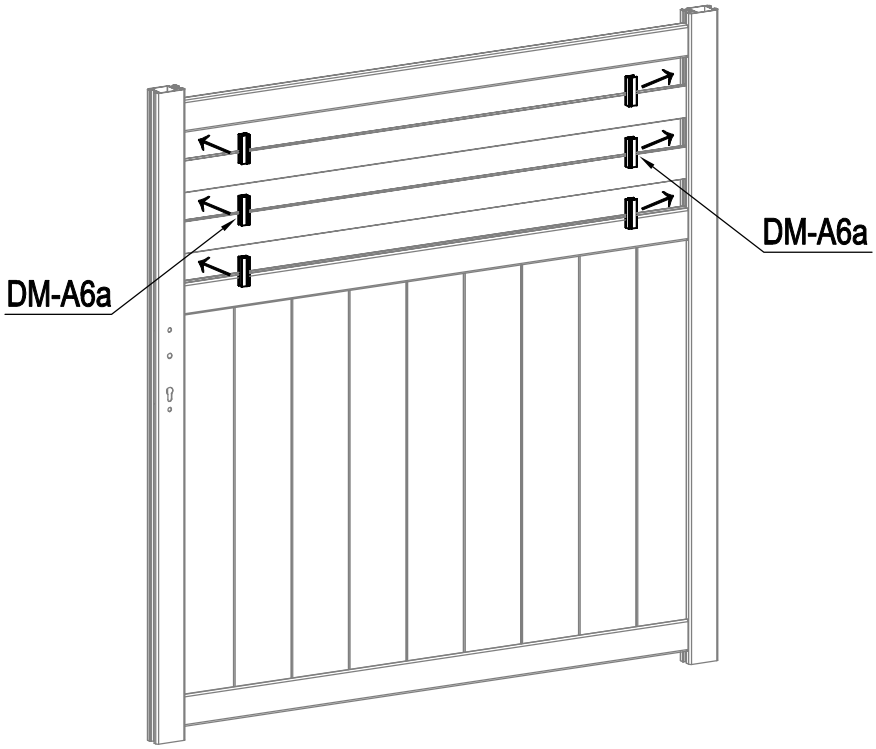

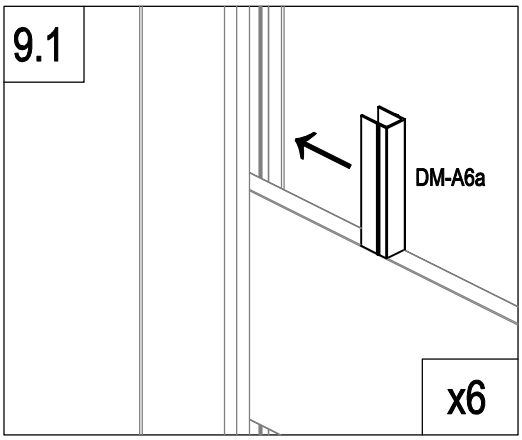

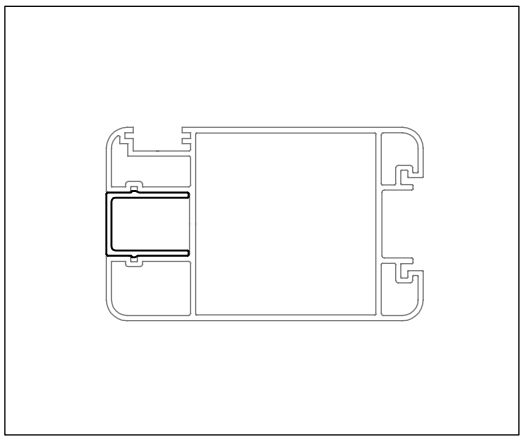

	DM-A6a	6

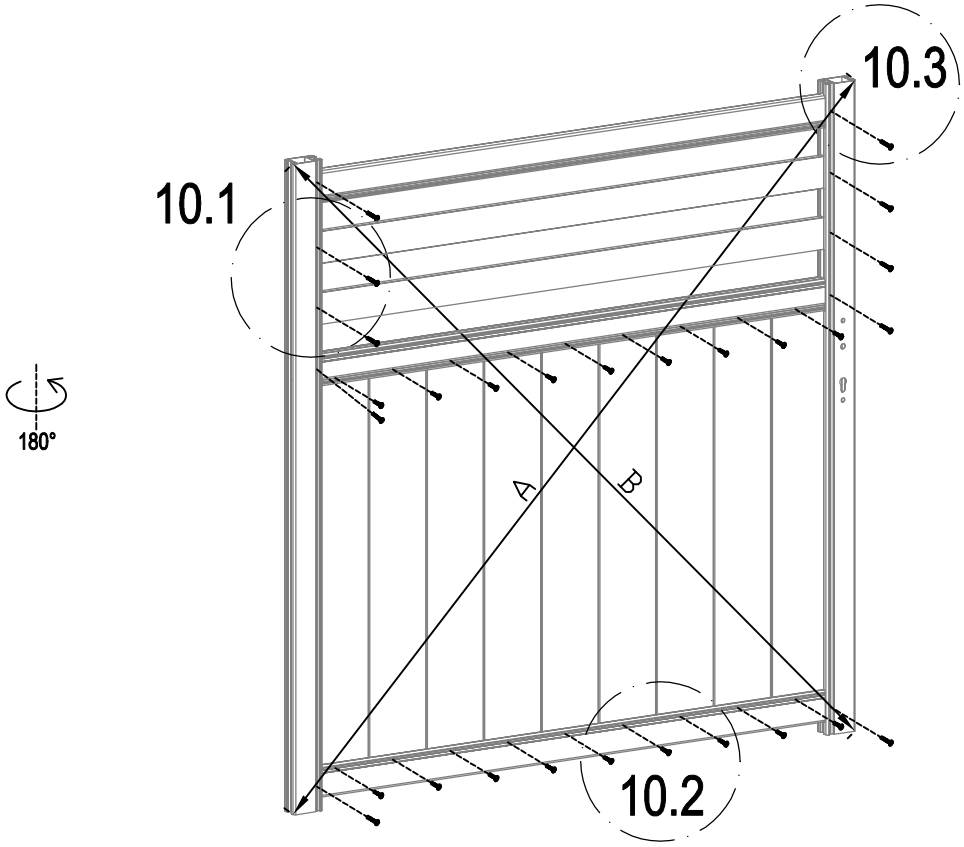

A=B

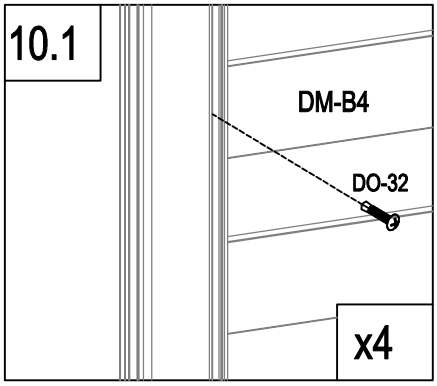

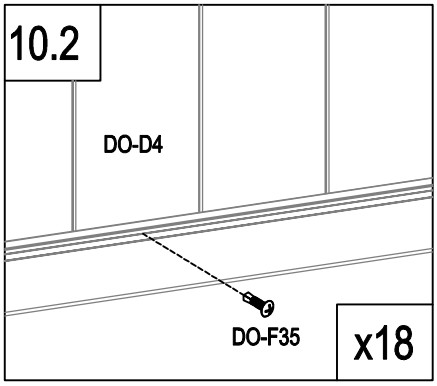

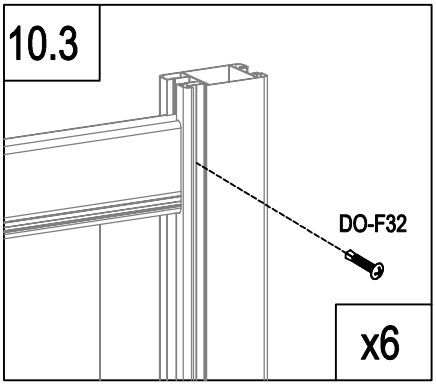

	DO-32	4
	DO-F35	18
	DO-F32	6

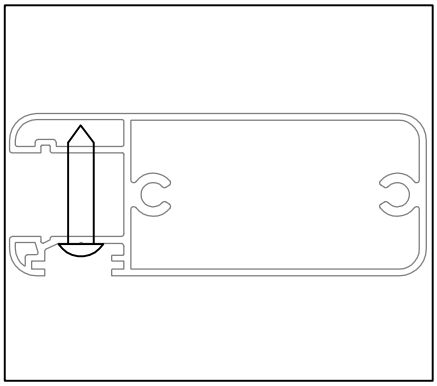

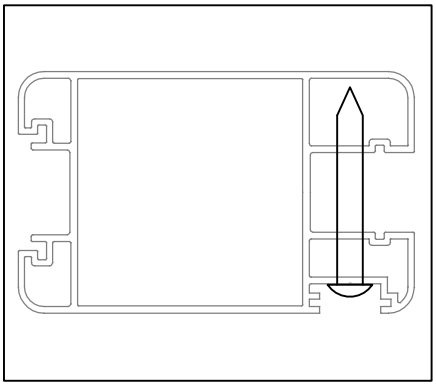

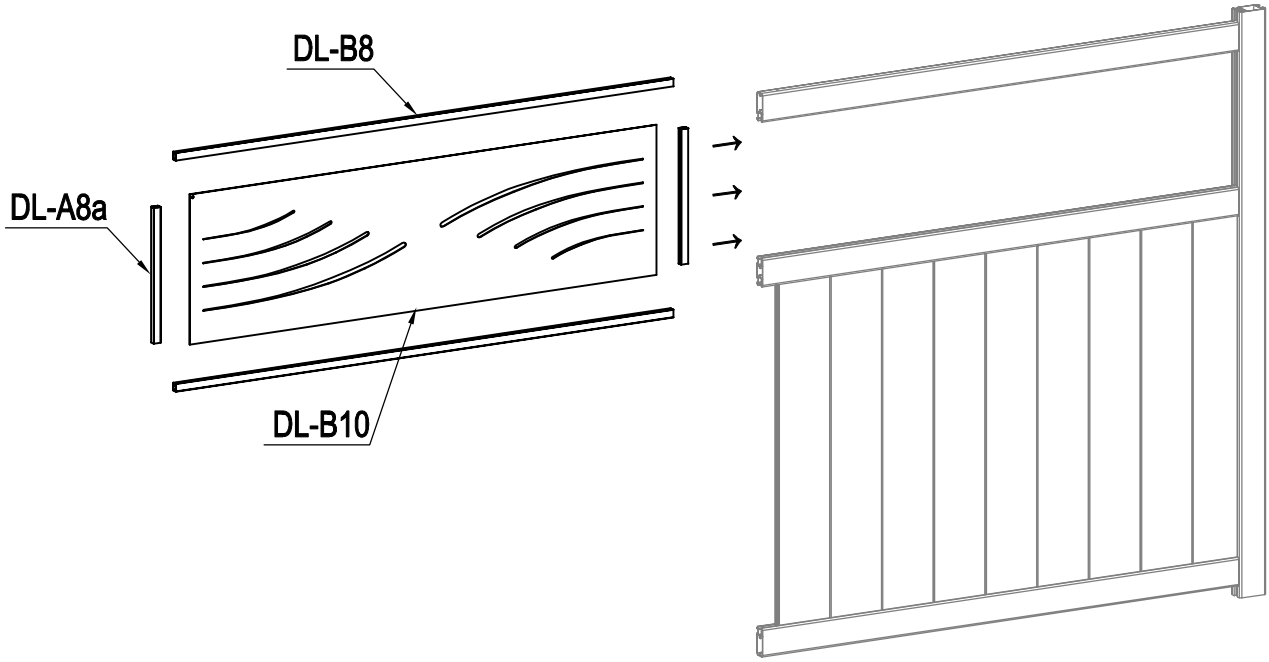

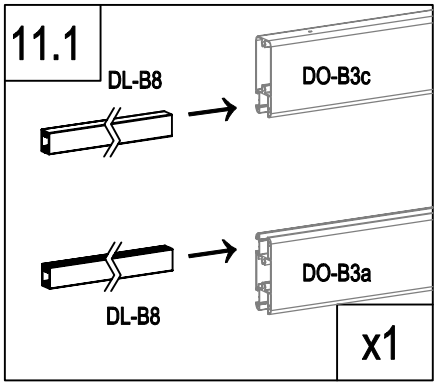

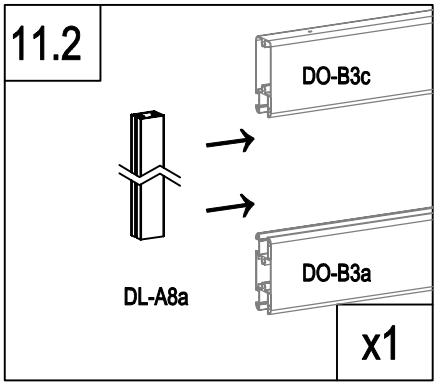

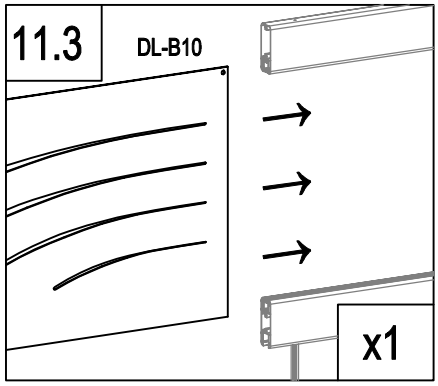

	DL-B10	1
	DL-B8	2
	DL-A8a	2

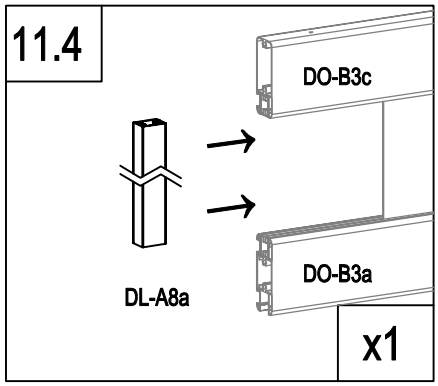

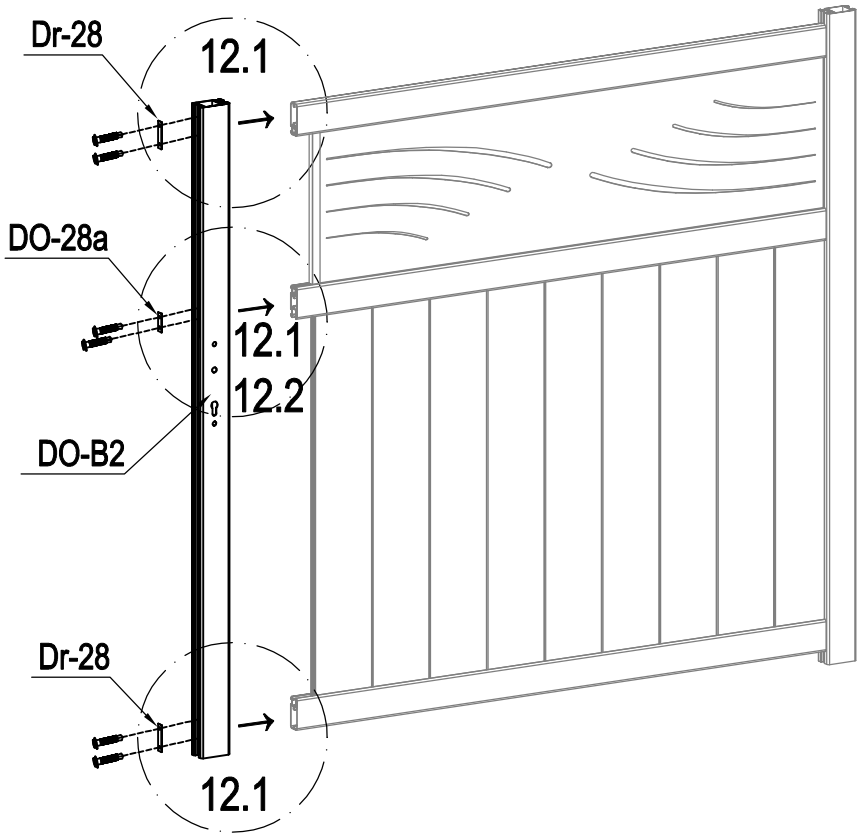

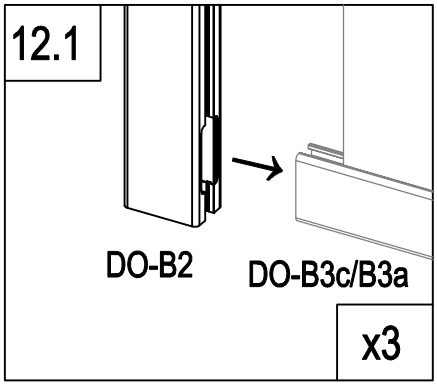

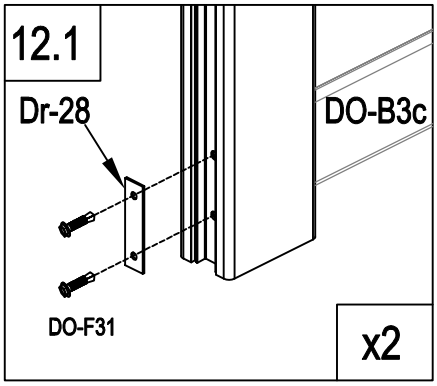

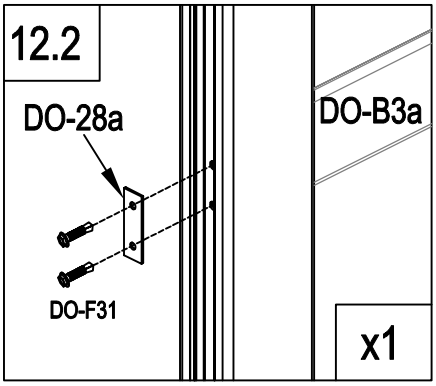

	DO-B2	1
	Dr-28	2
	DO-28a	1
	DO-F31	6

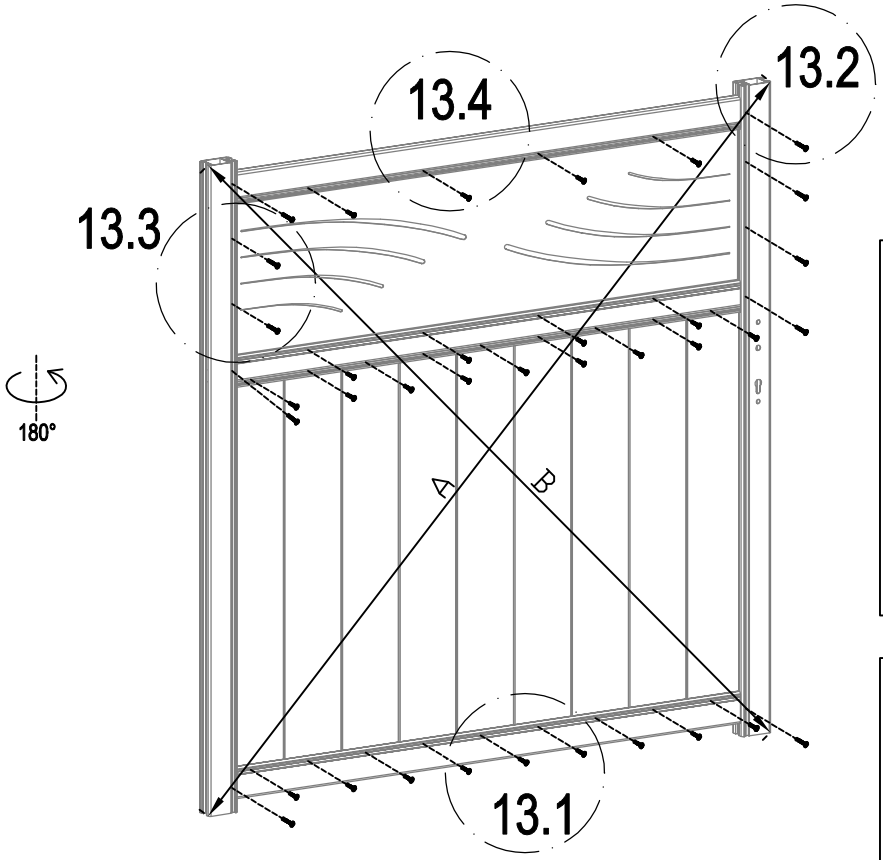

A=B

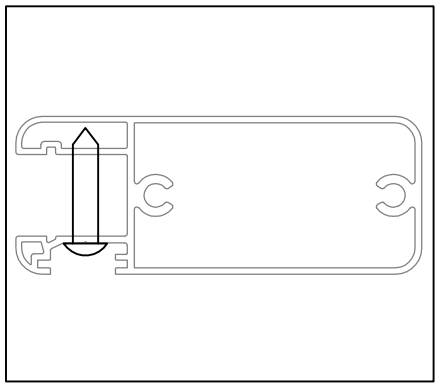

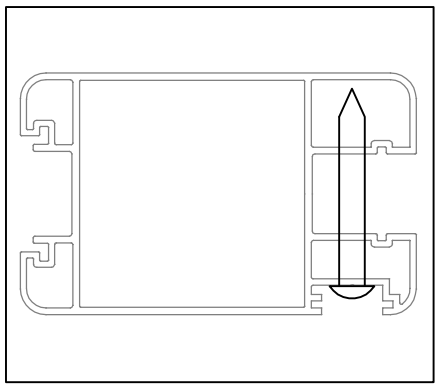

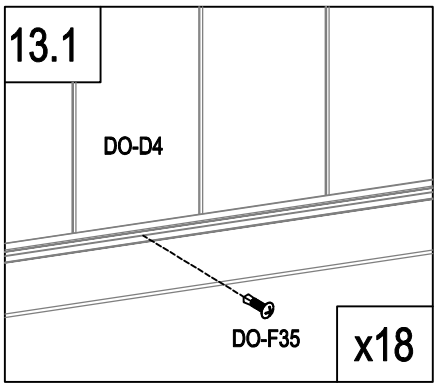

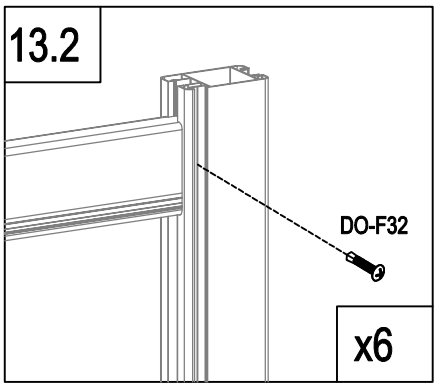

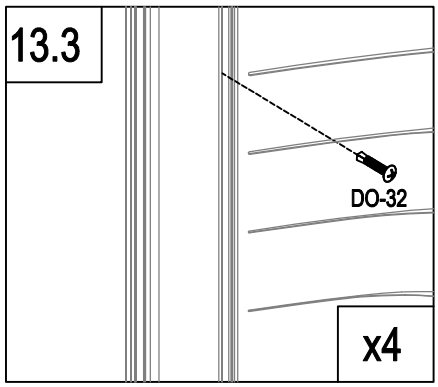

	DO-32	4
	DO-35	8
	DO-F35	18
	DO-F32	6

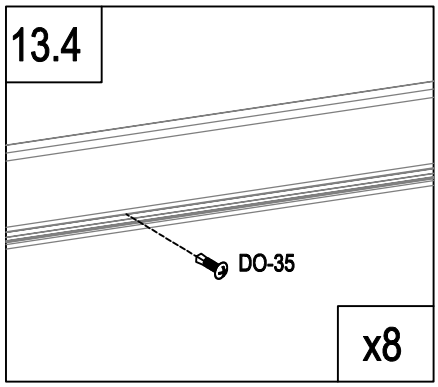

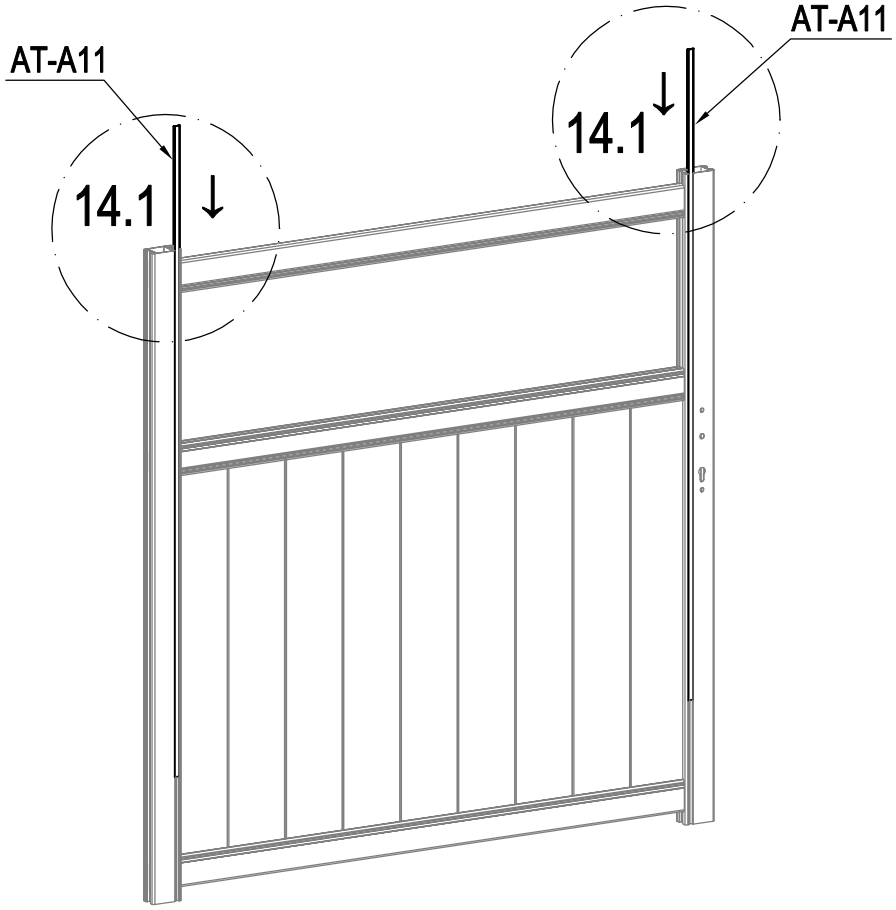

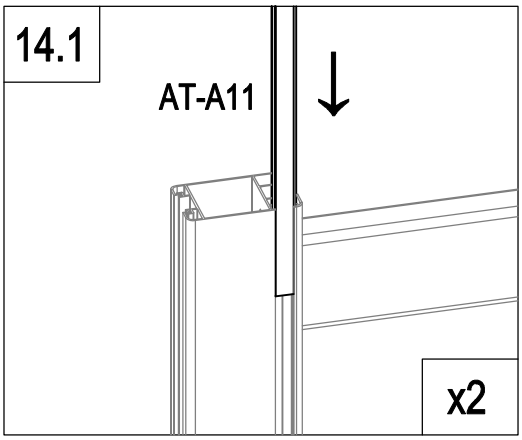

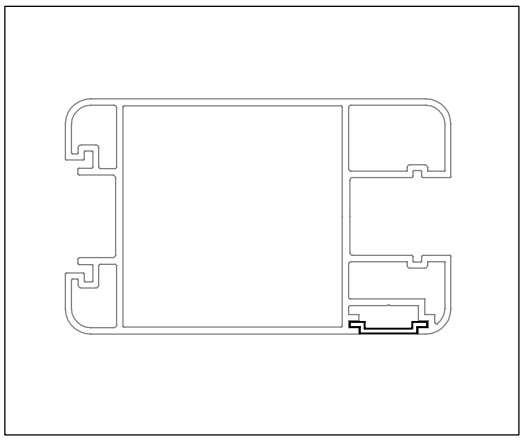

	AT-A11	2

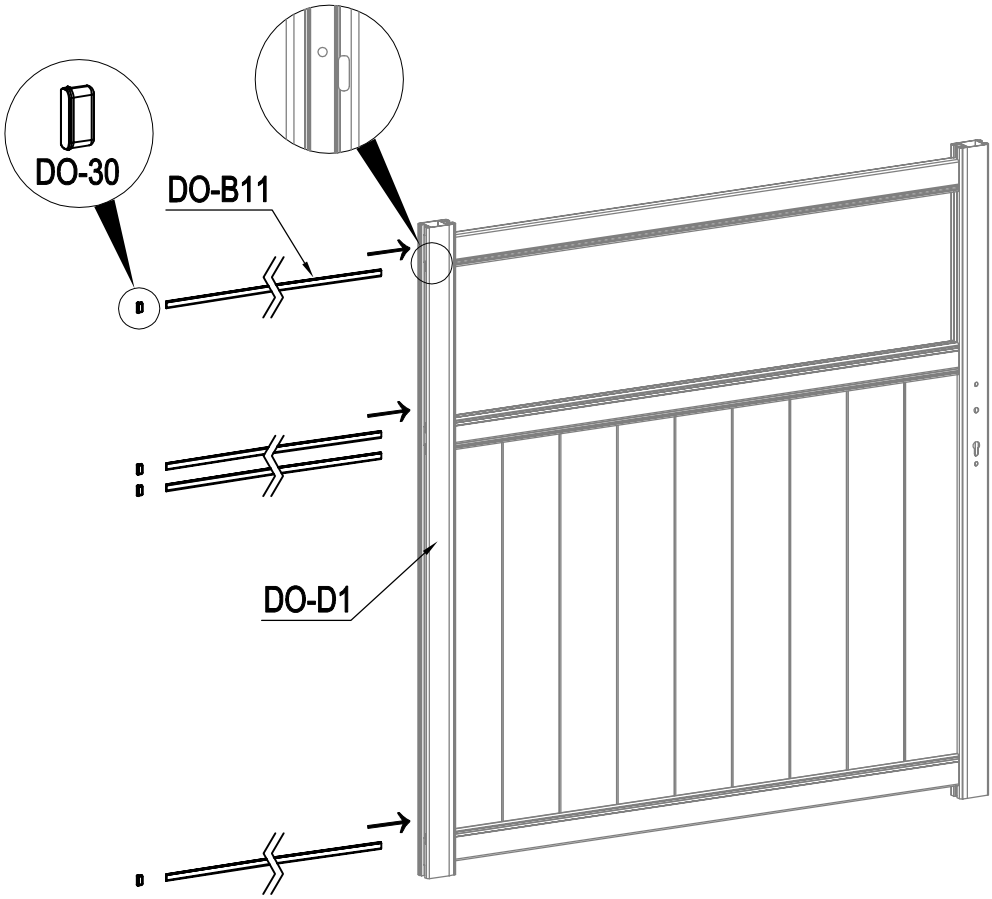

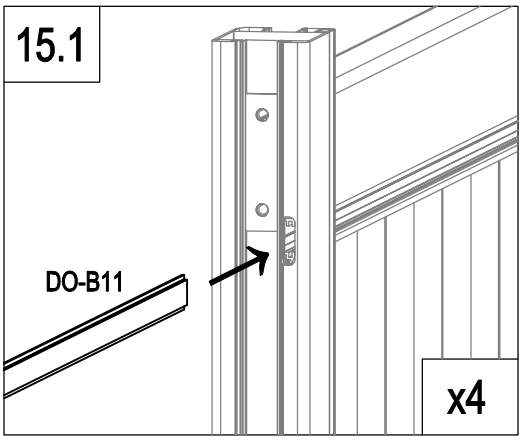

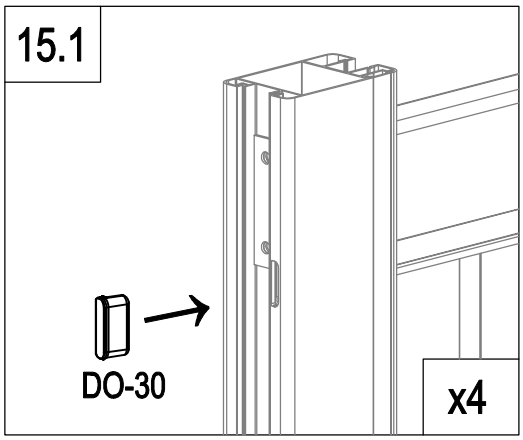

	DO-B11	4
	DO-30	4

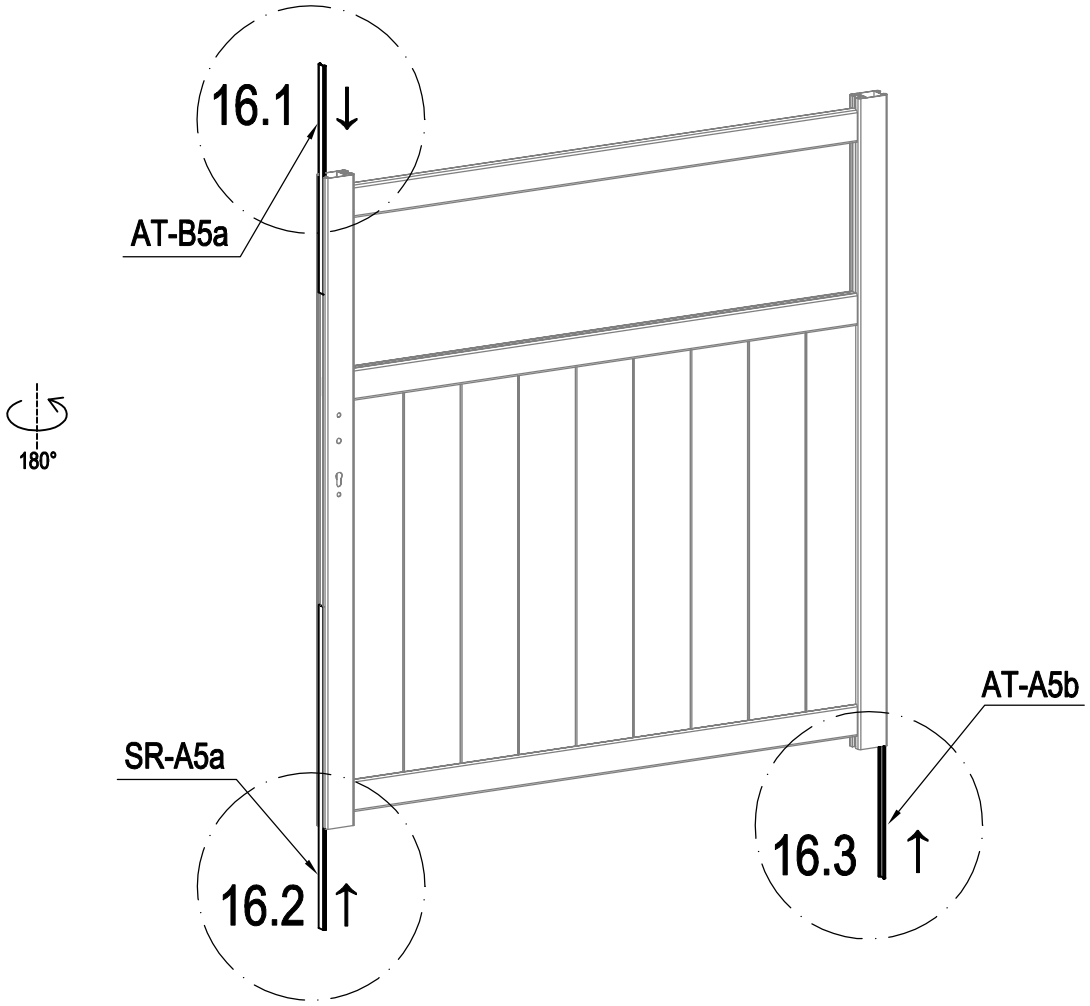

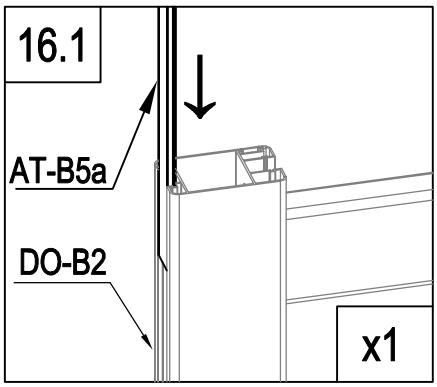

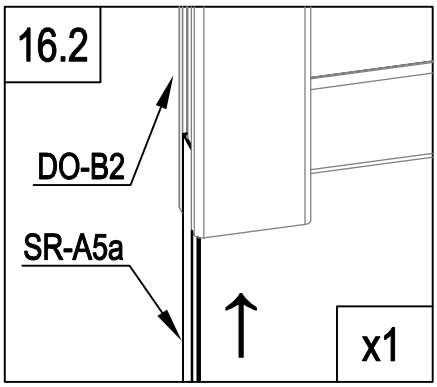

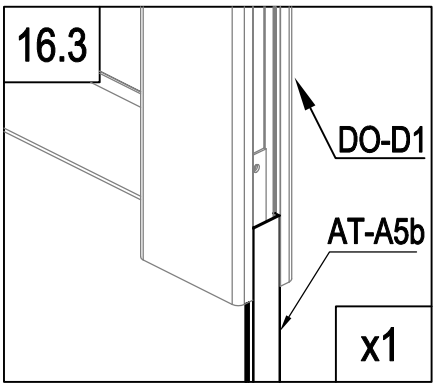

	AT-A5b	1
	AT-B5a	1
	SR-A5a	1

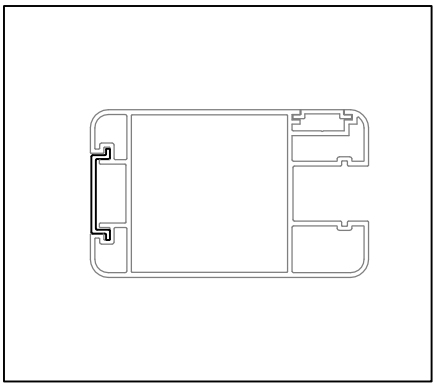

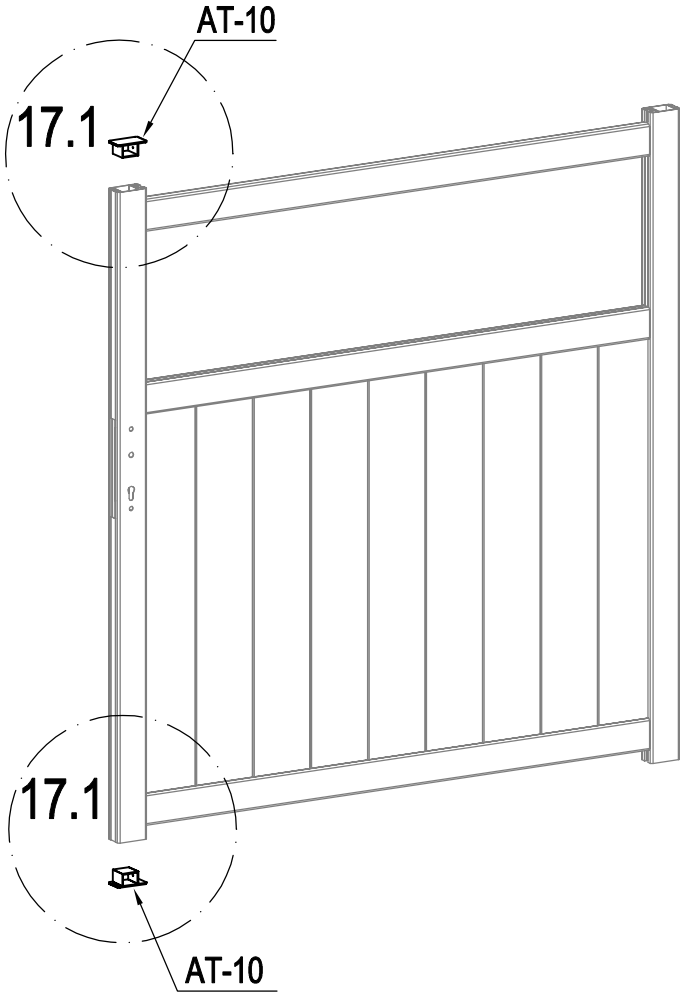

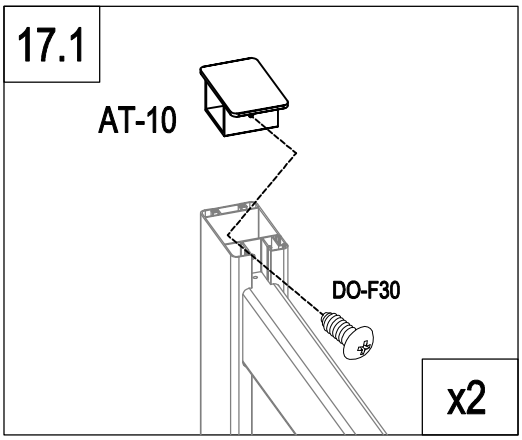

	AT-10	2
	DO-F30	2

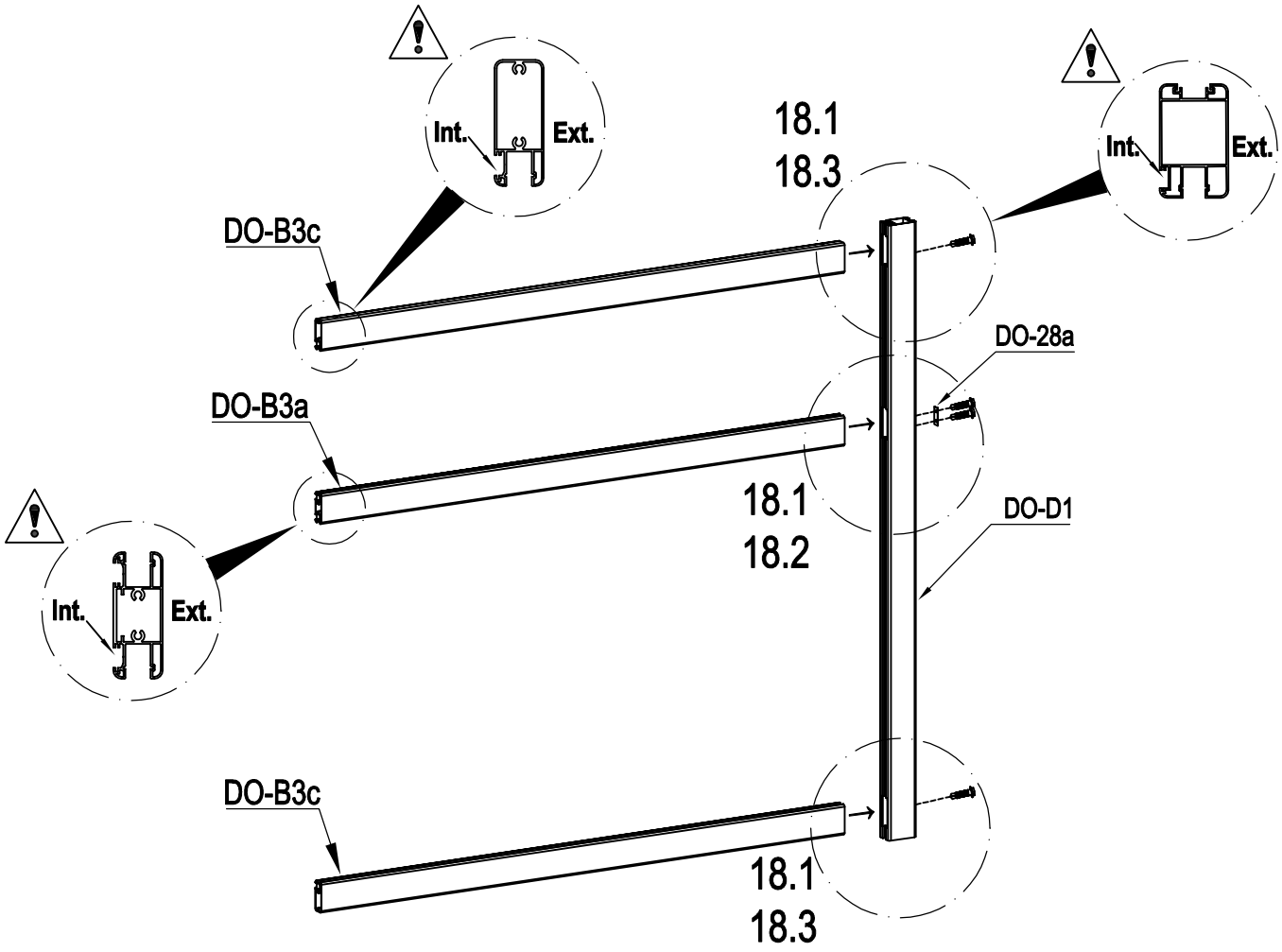

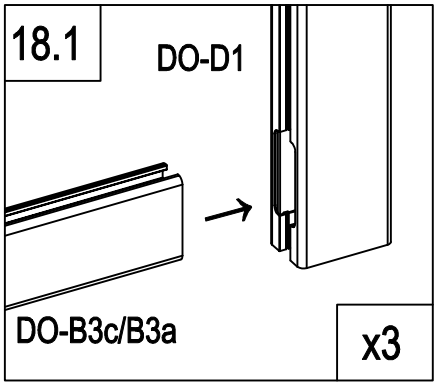

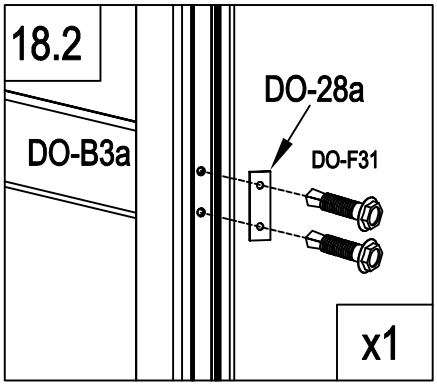

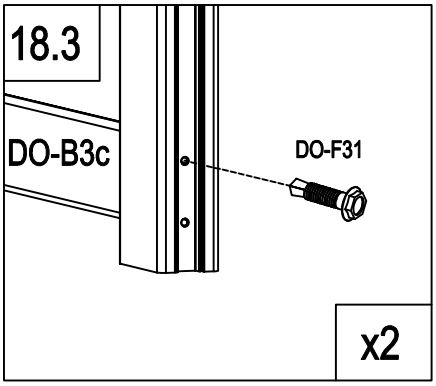

	DO-D1	1
	DO-B3c	2
	DO-B3a	1

	DO-28a	1
	DO-F31	4

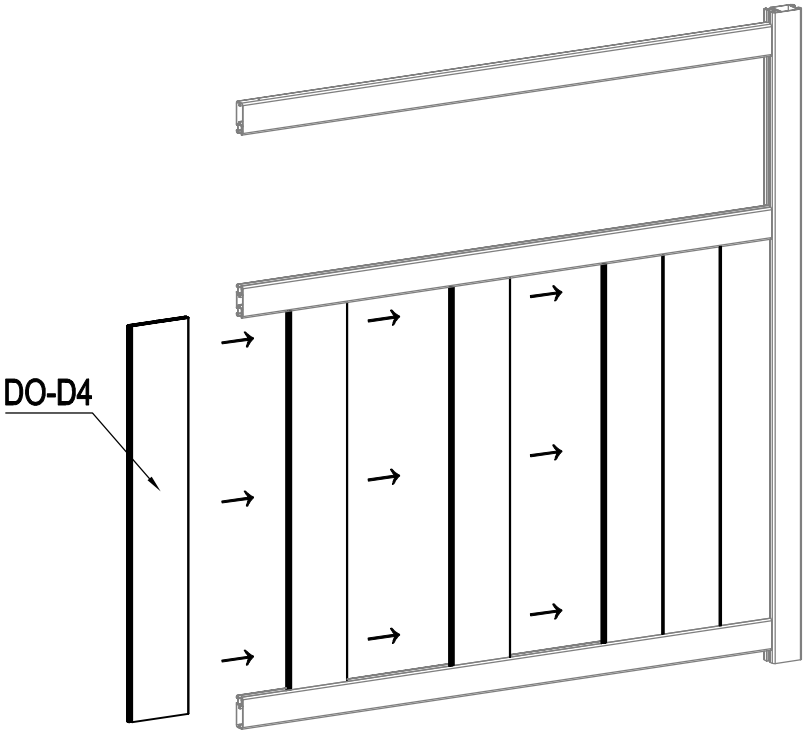

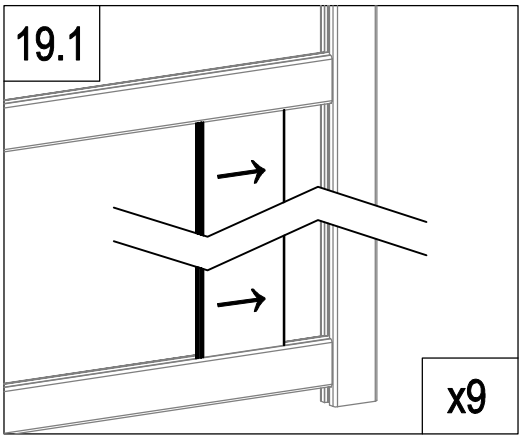

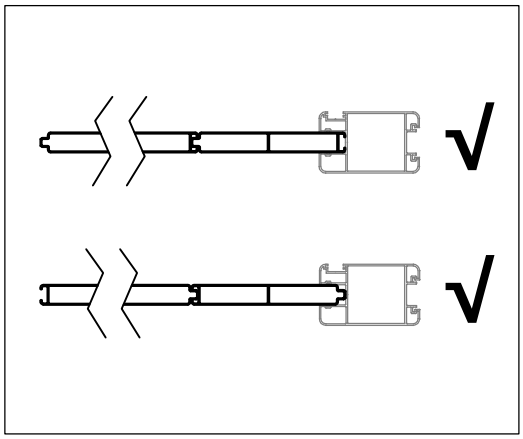

	DO-D4	9

Optional Kit →

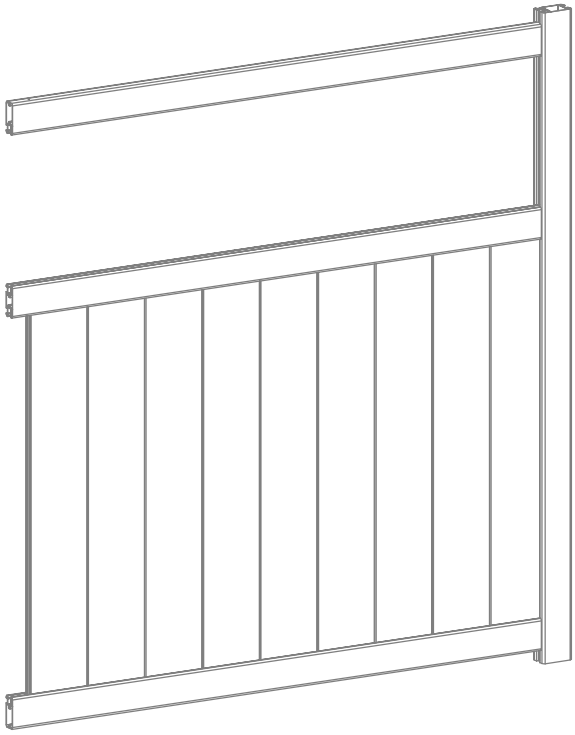

P 22~25

P 26~29

P 30~32

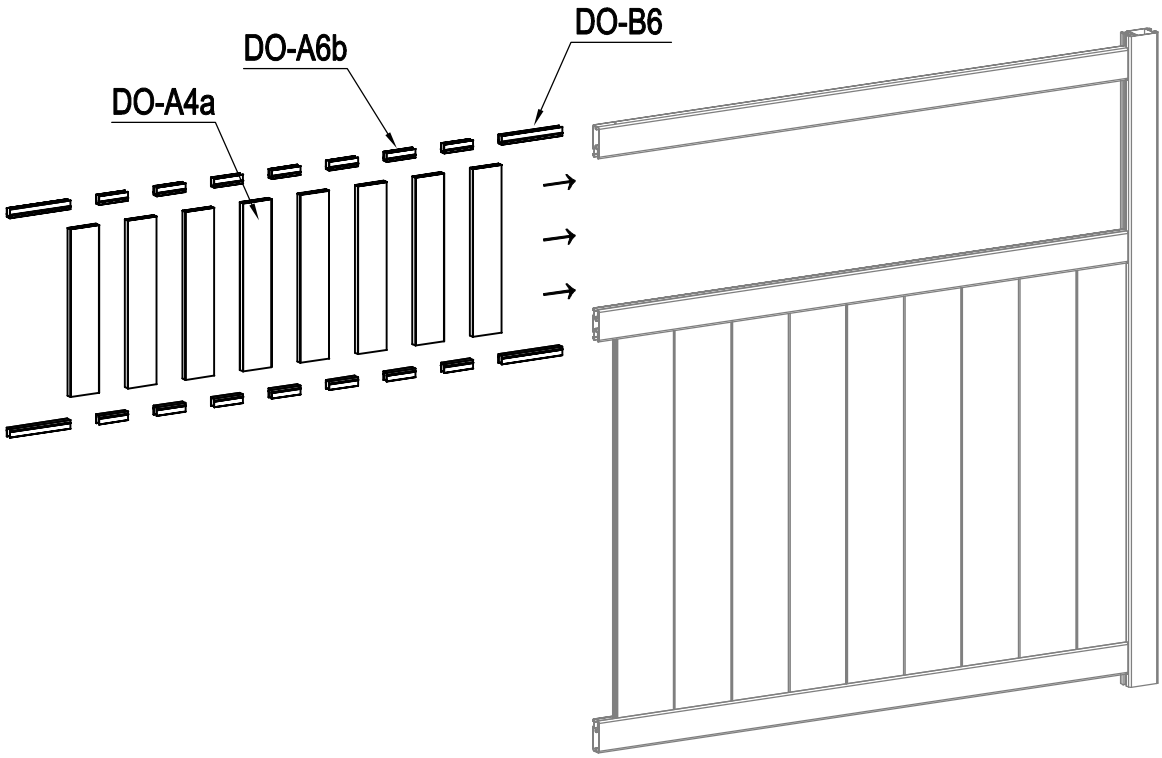

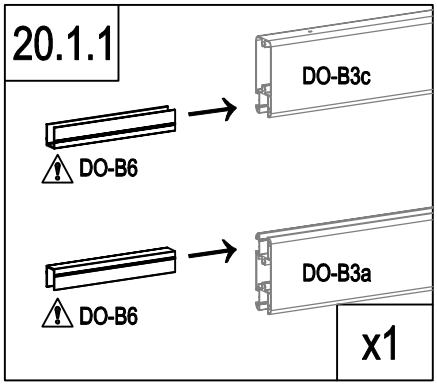

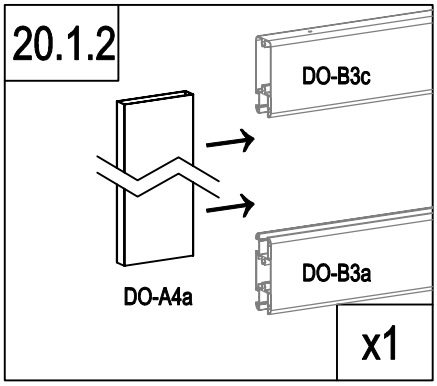

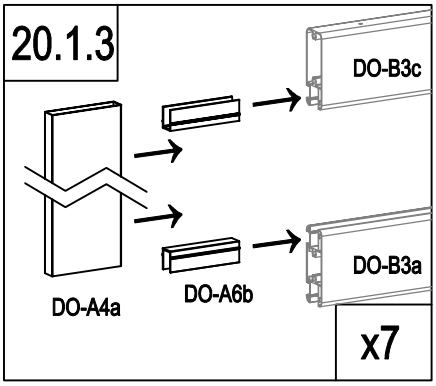

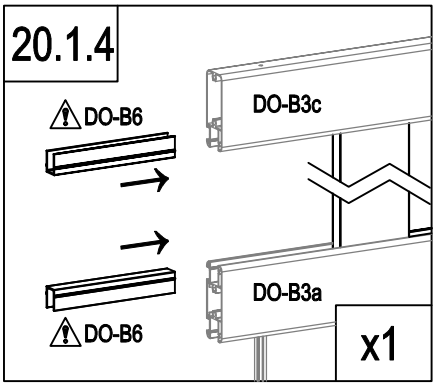

	DO-A4a	406mm	8
	DO-B6	163mm	4
	DO-A6b	77.5mm	14

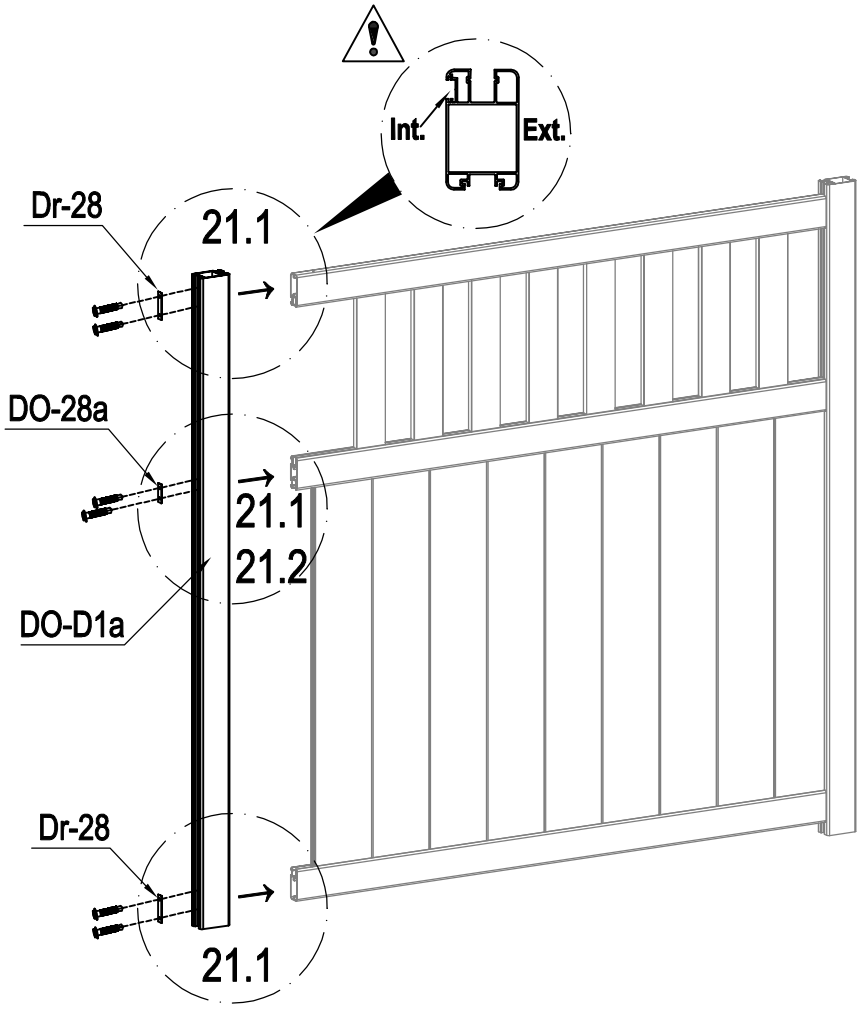

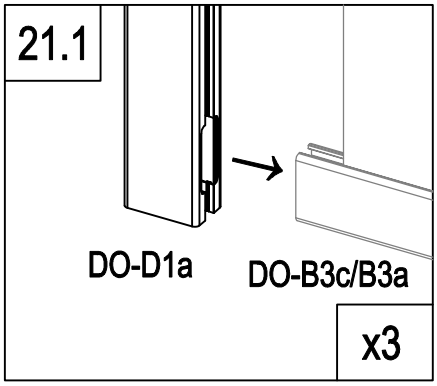

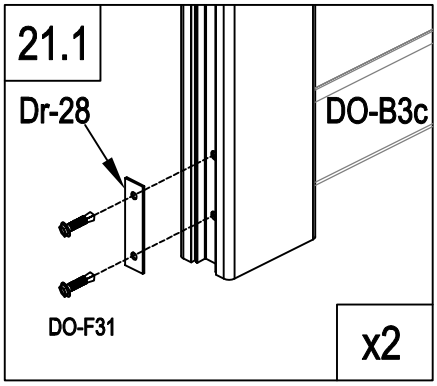

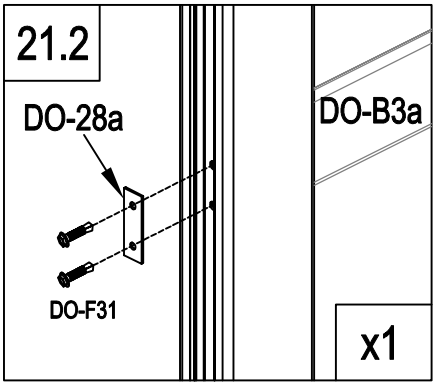

	DO-D1a	1
	Dr-28	2
	DO-28a	1
	DO-F31	6

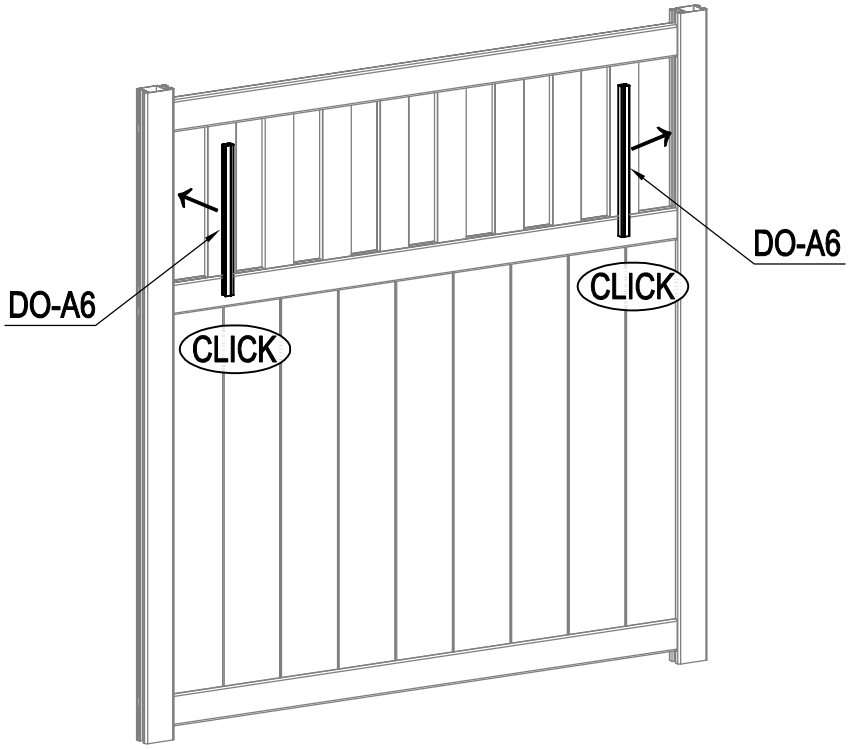

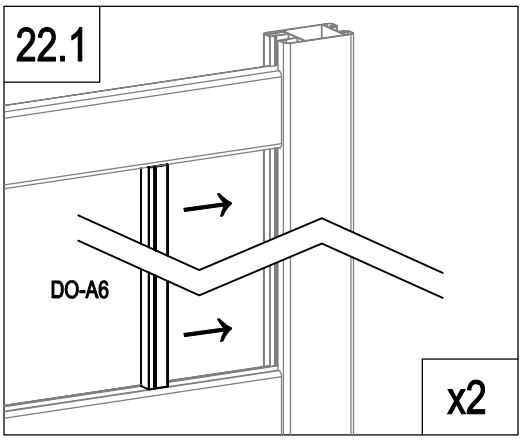

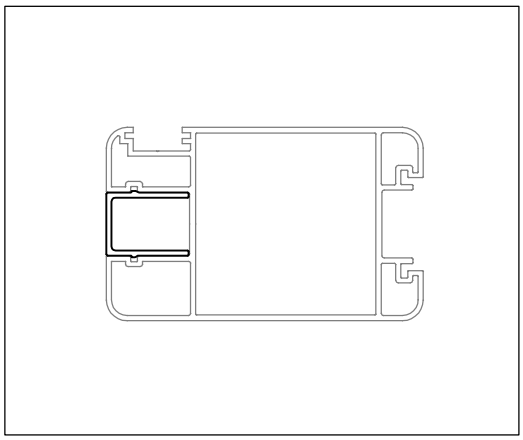

	DO-A6	2

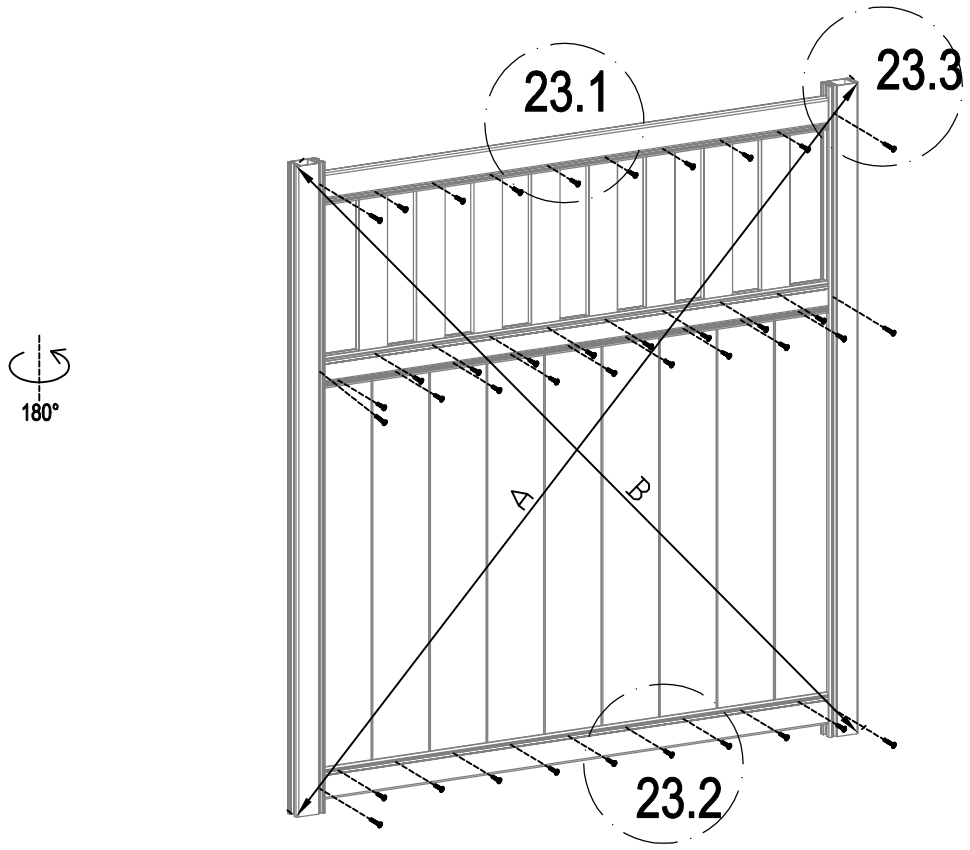

⚠ A=B

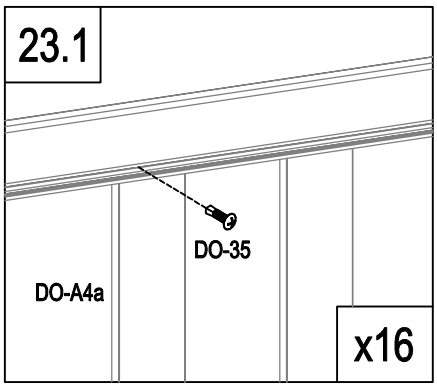

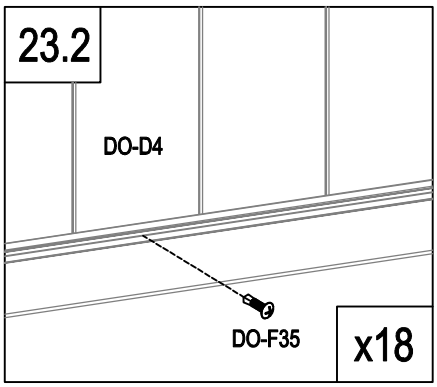

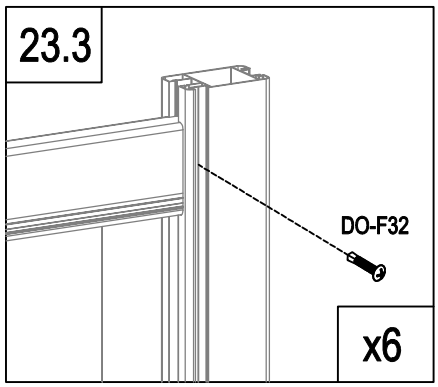

	DO-35	16
	DO-F35	18
	DO-F32	6

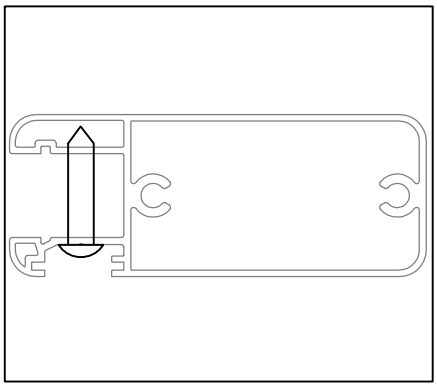

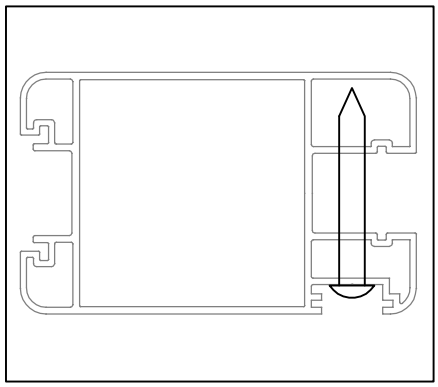

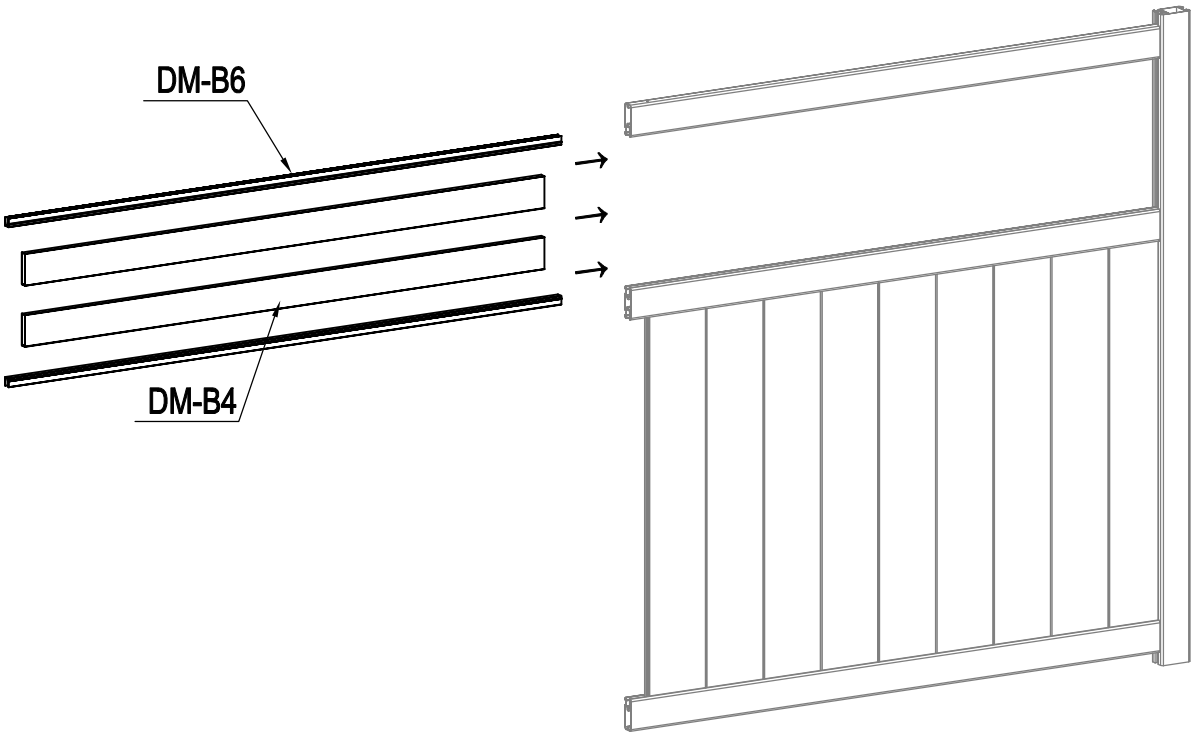

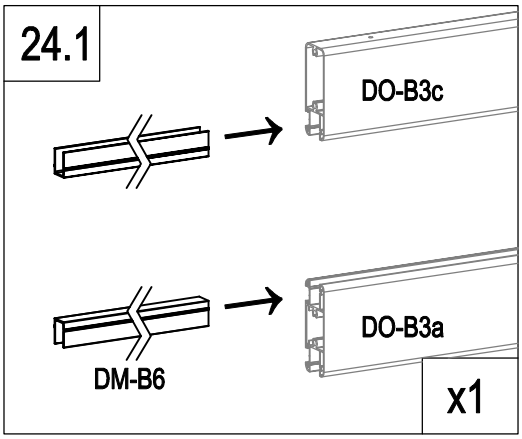

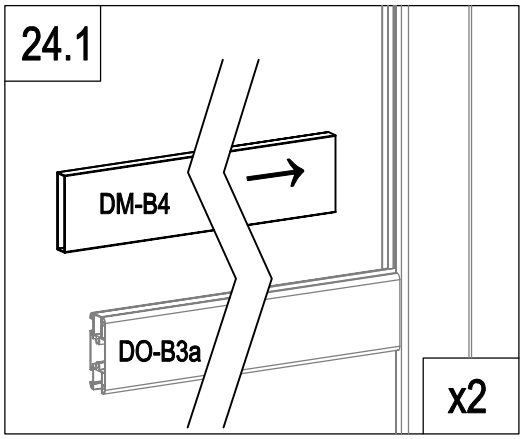

	DM-B4	2
	DM-B6	2

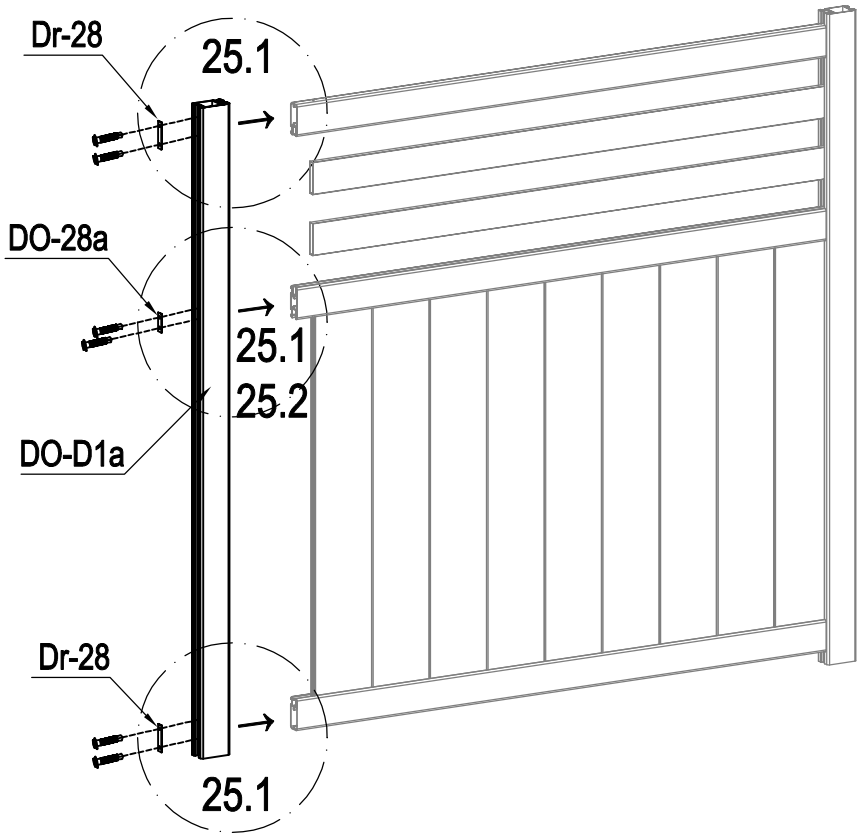

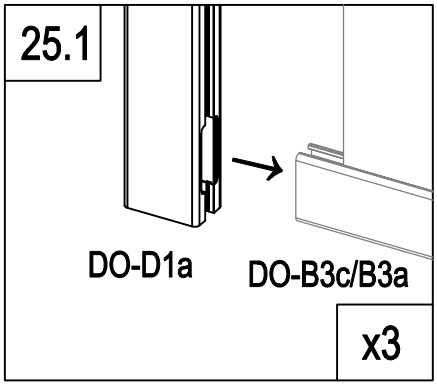

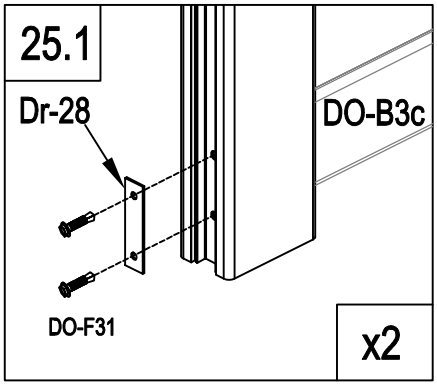

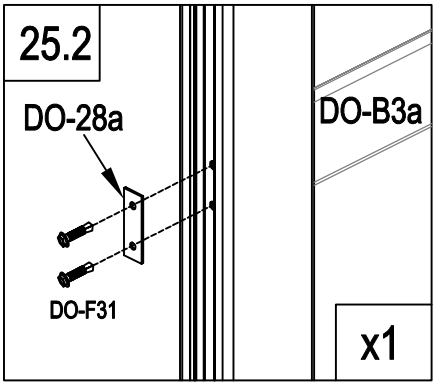

	DO-D1a	1
	Dr-28	2
	DO-28a	1
	DO-F31	6

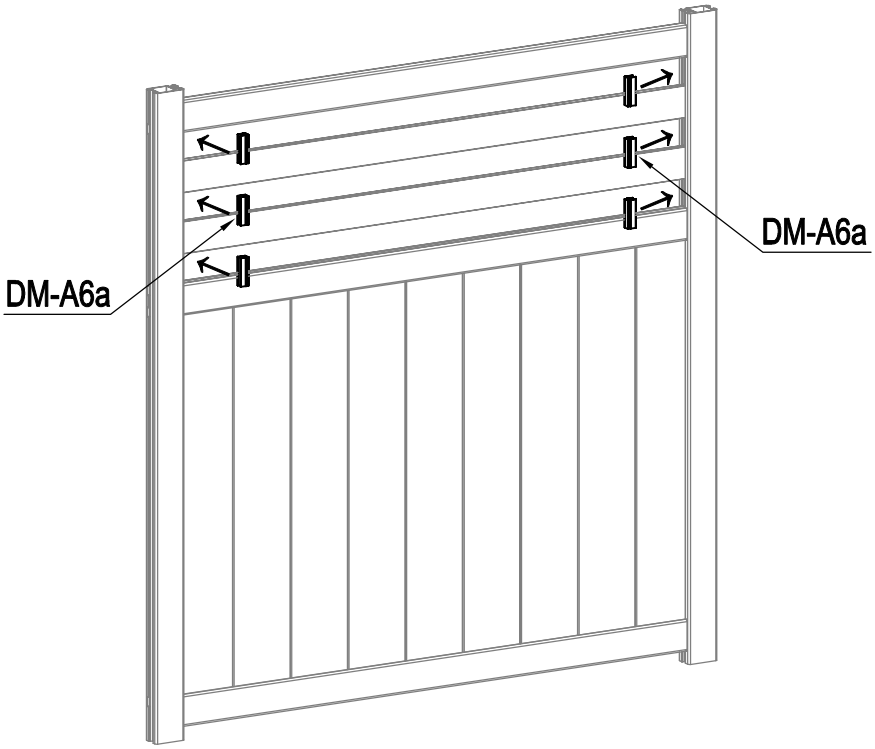

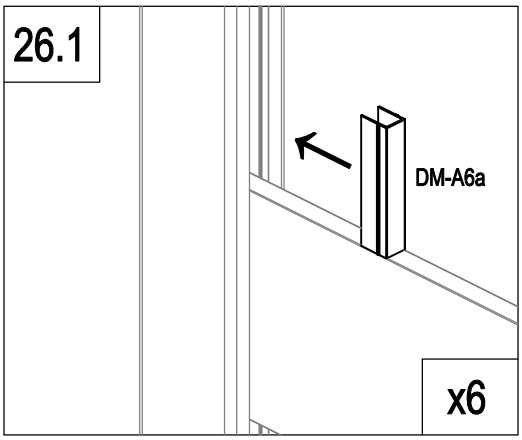

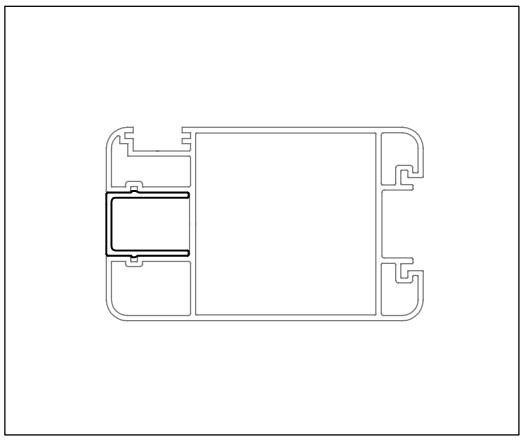

	DM-A6a	6

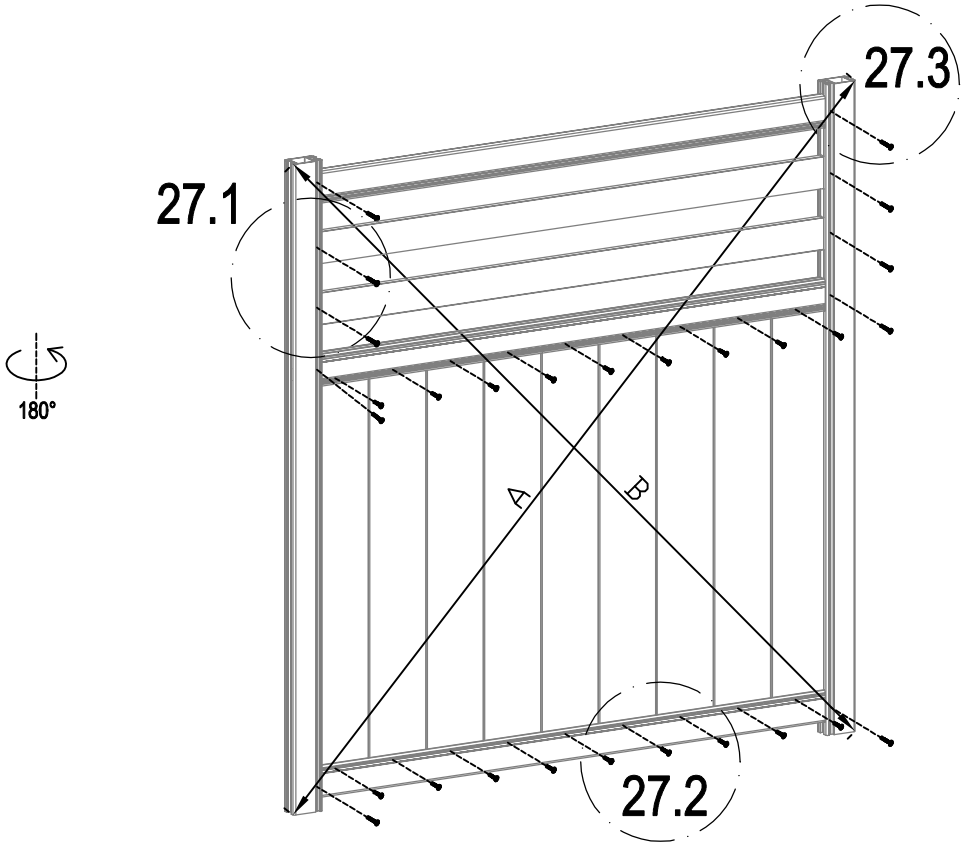

⚠ A=B

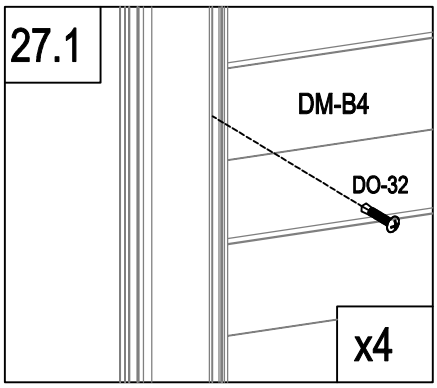

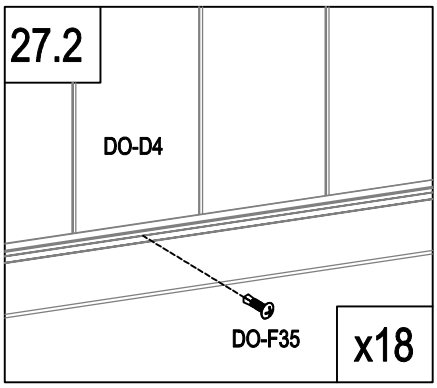

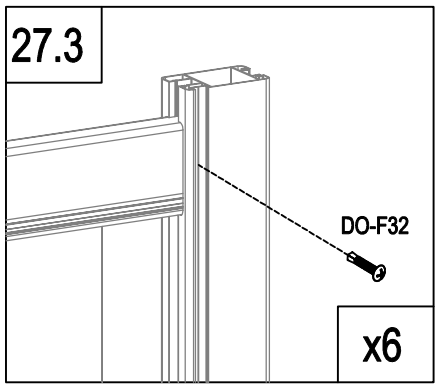

	DO-32	4
	DO-F35	18
	DO-F32	6

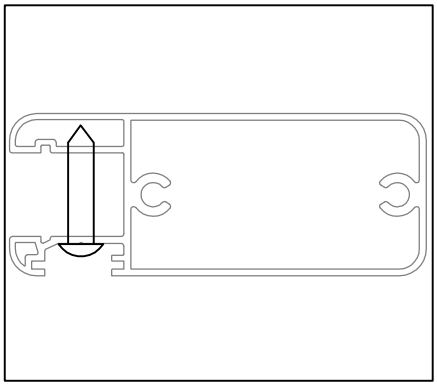

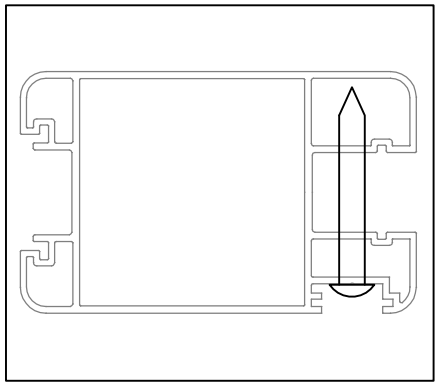

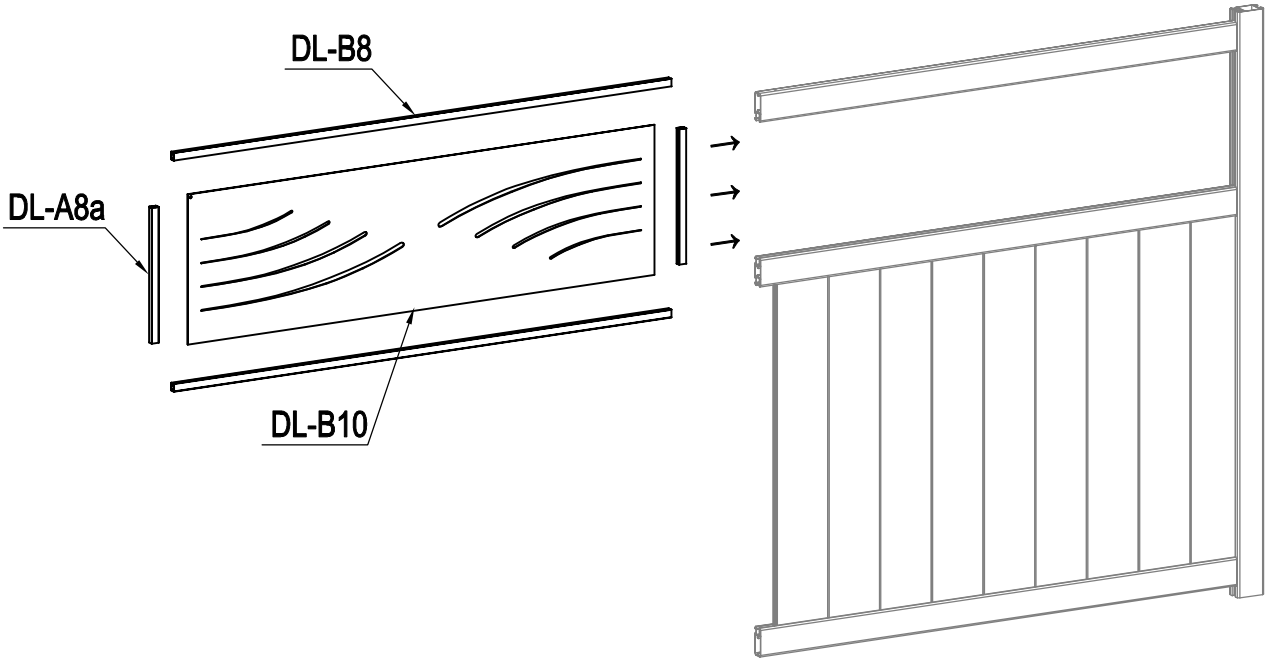

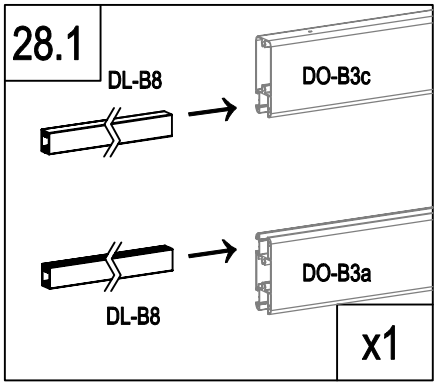

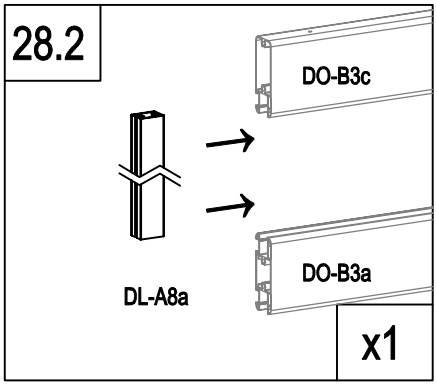

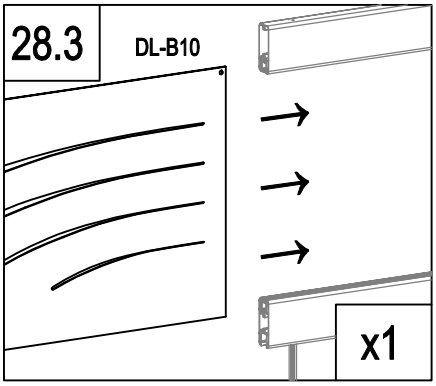

	DL-B10	1
	DL-B8	2
	DL-A8a	2

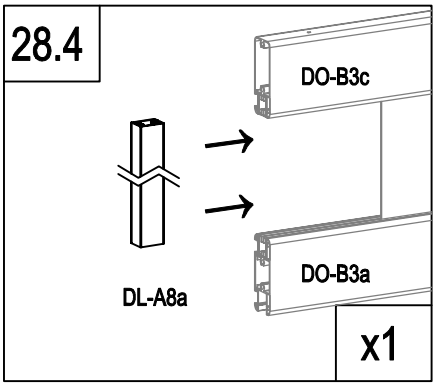

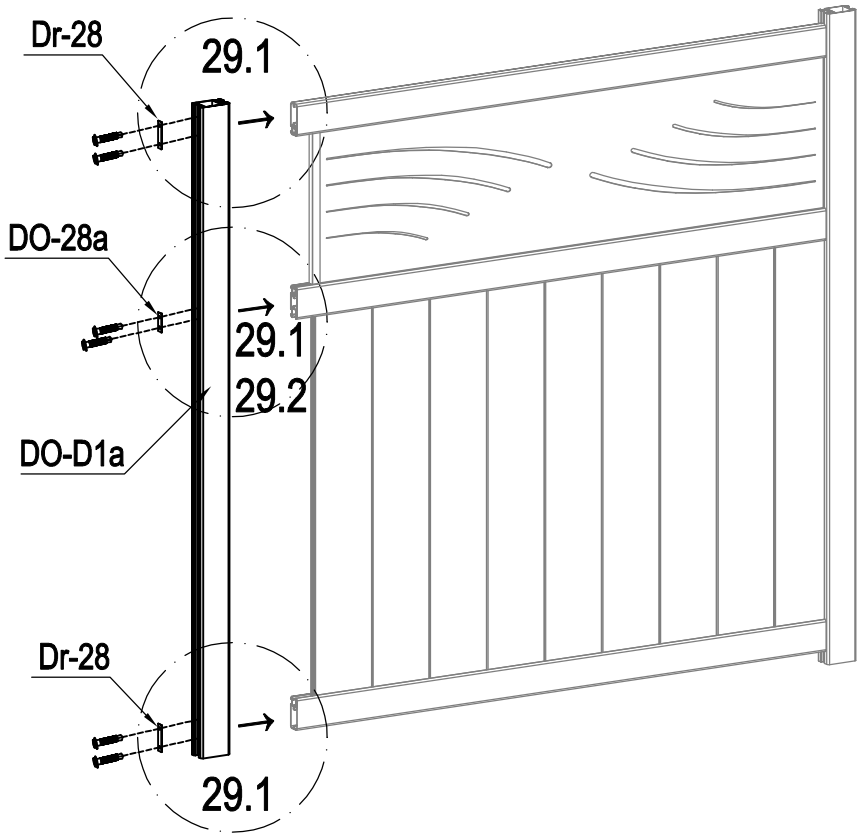

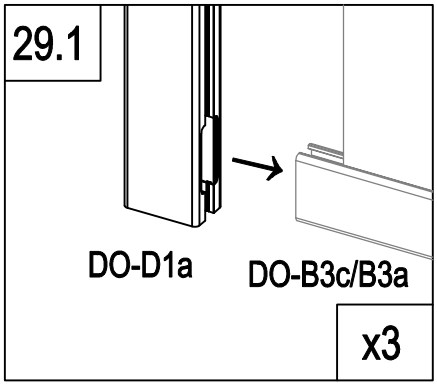

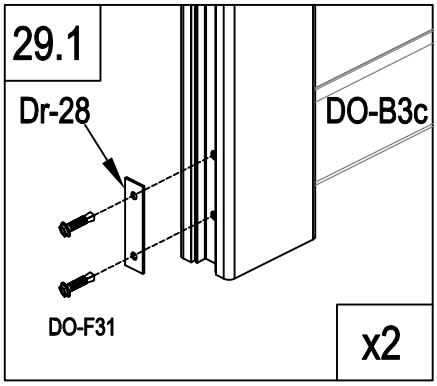

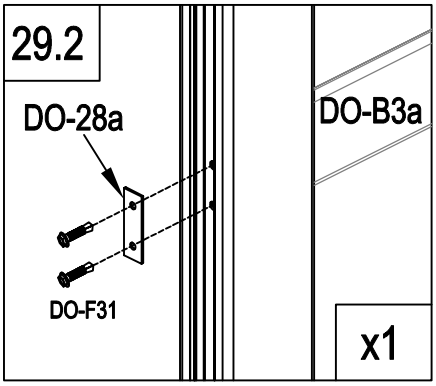

	DO-D1a	1
	Dr-28	2
	DO-28a	1
	DO-F31	6

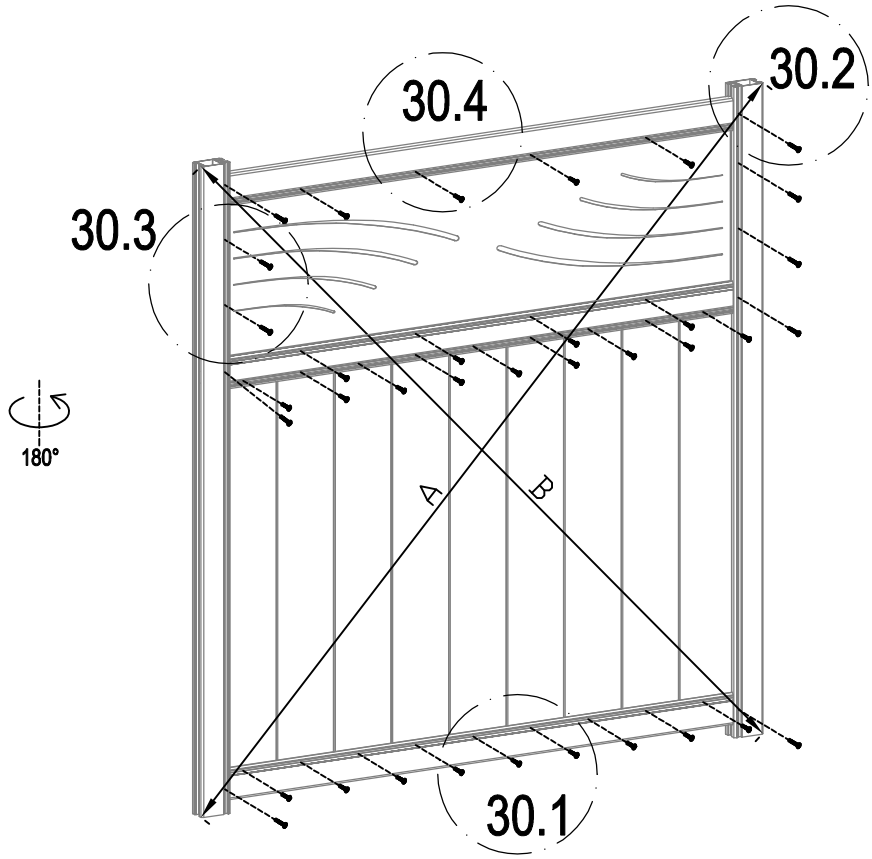

A=B

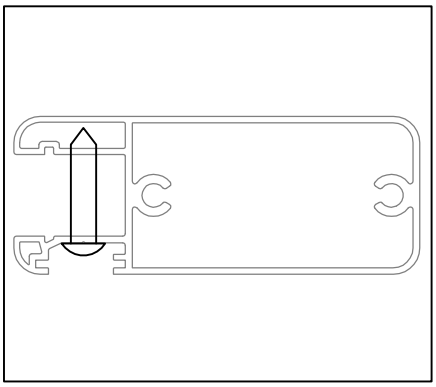

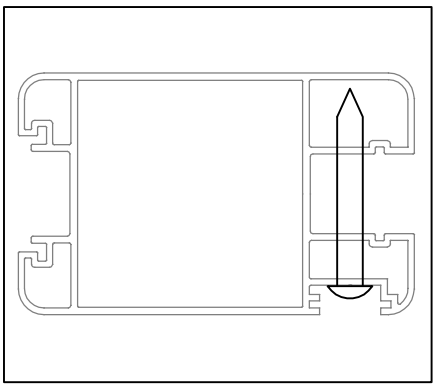

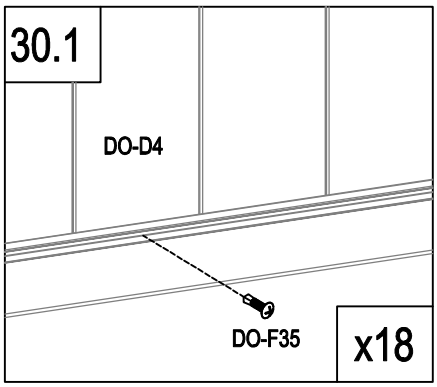

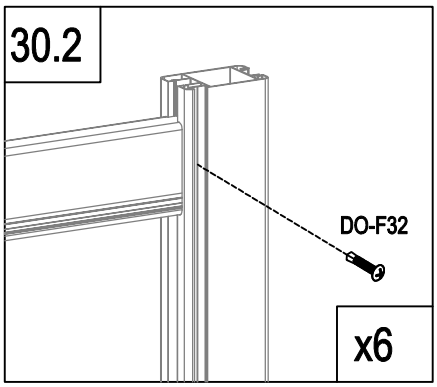

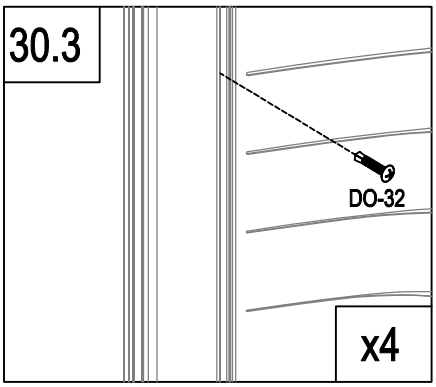

	DO-32	4
	DO-35	8
	DO-F35	18
	DO-F32	6

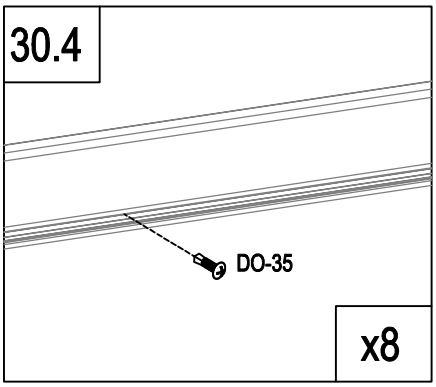

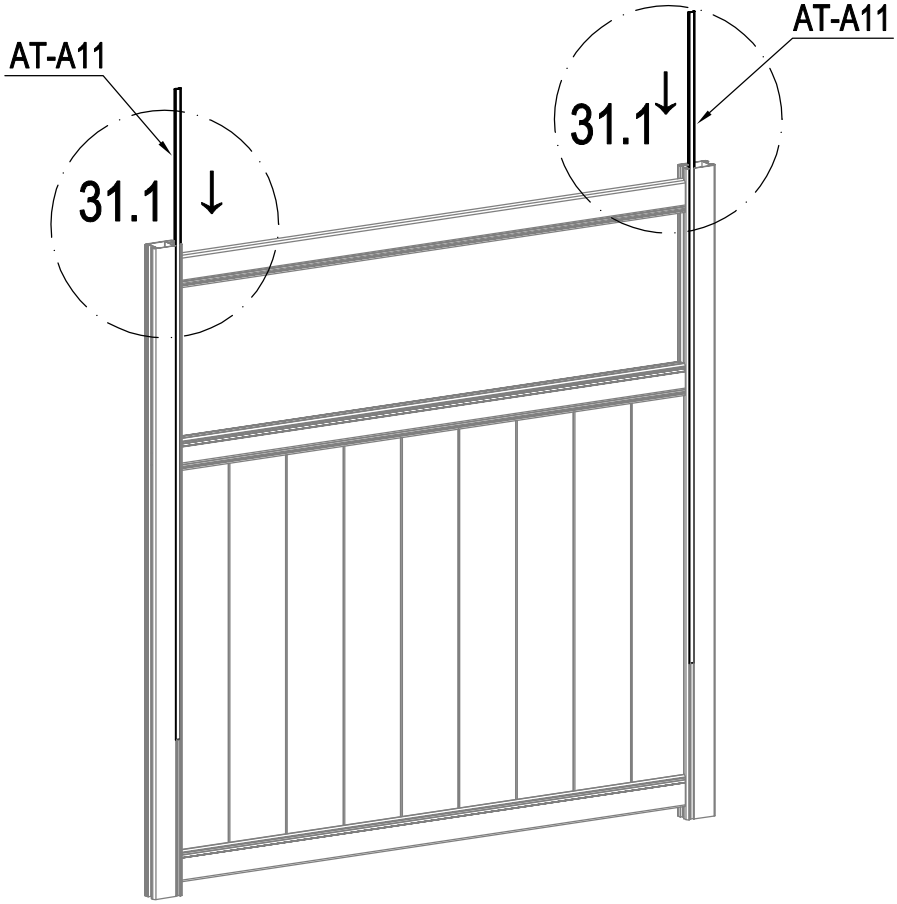

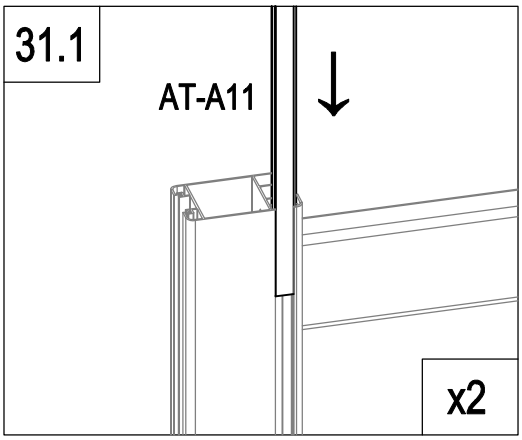

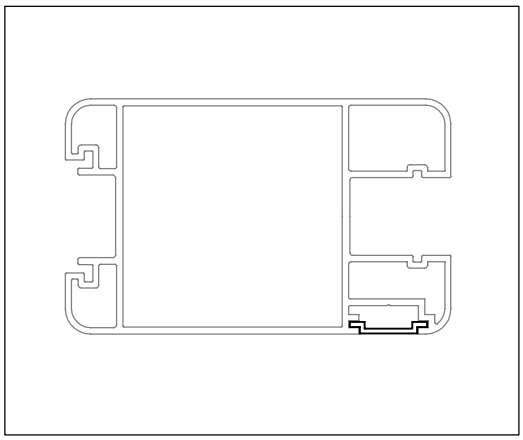

	AT-A11	2

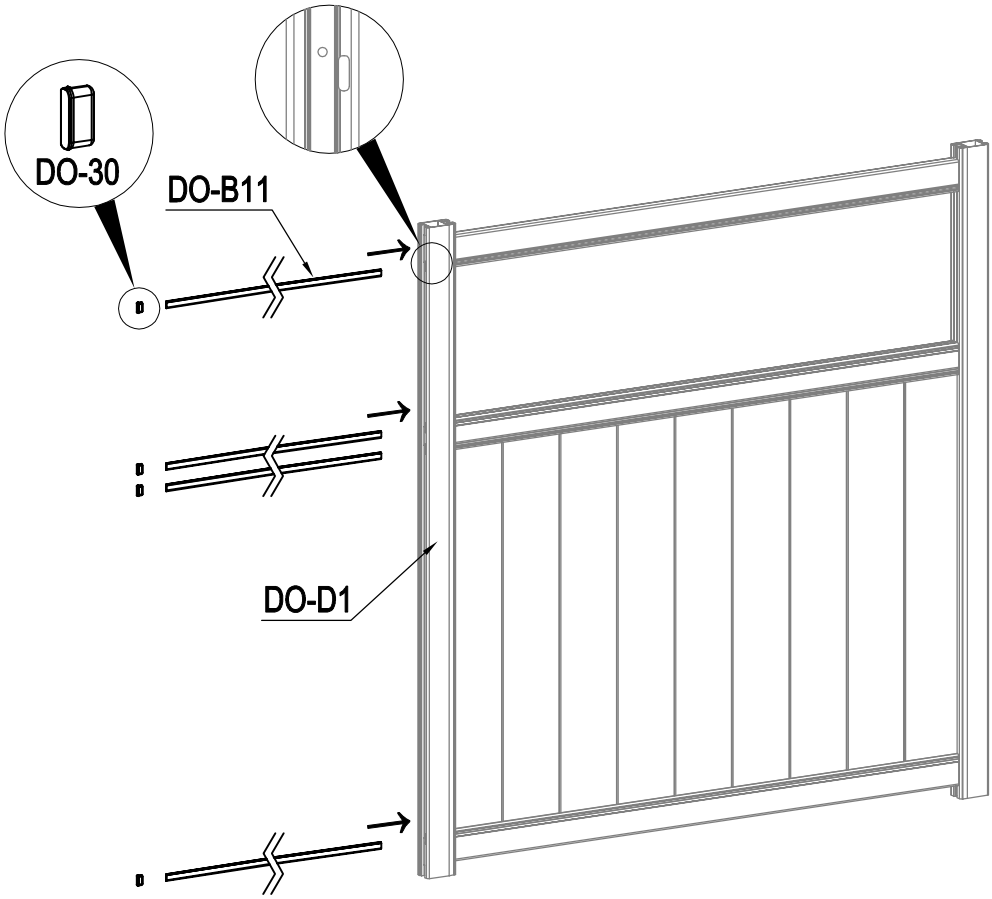

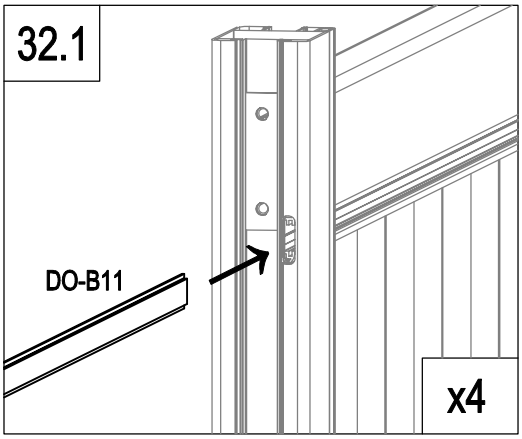

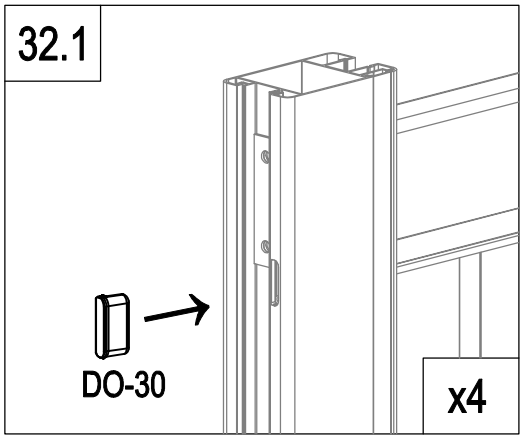

	DO-B11	4
	DO-30	4

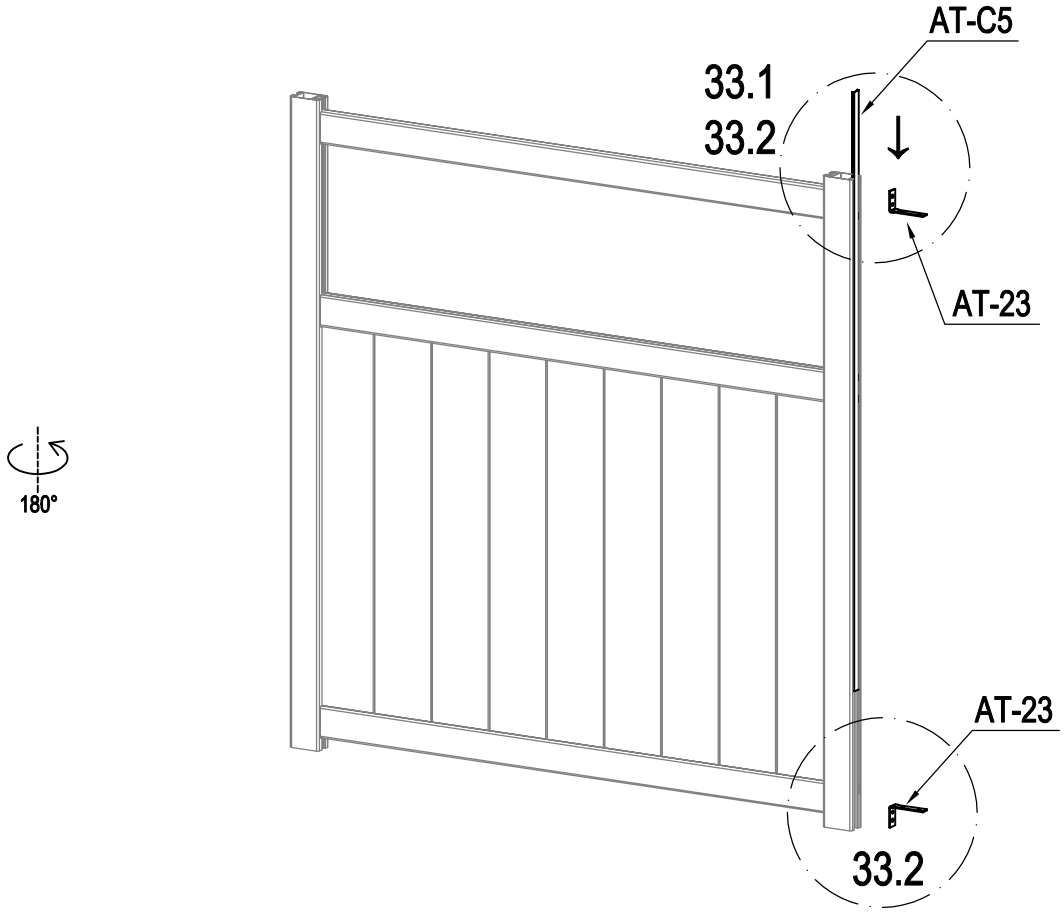

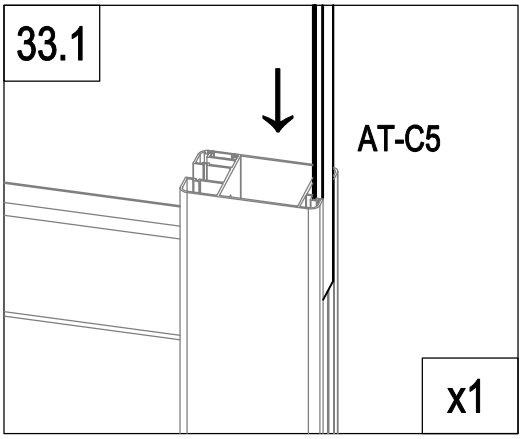

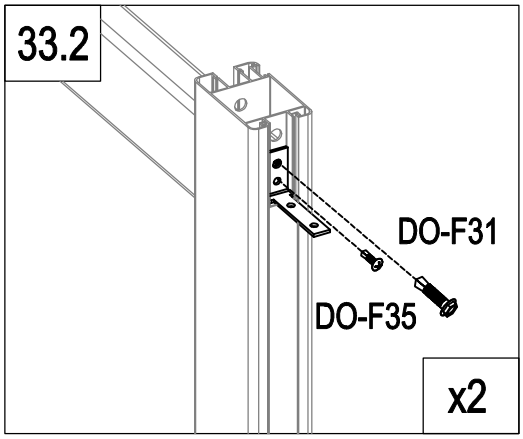

	AT-C5	1
	AT-23	2
	DO-F31	2
	DO-F35	2

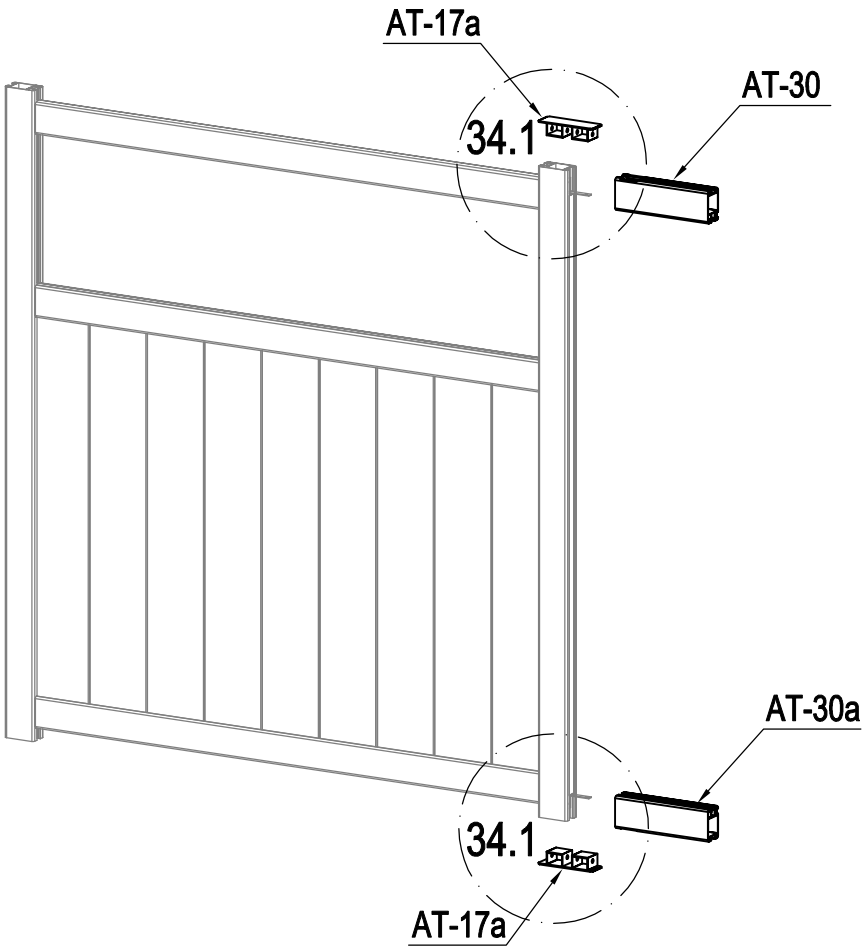

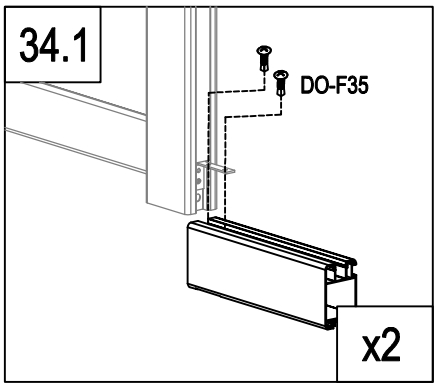

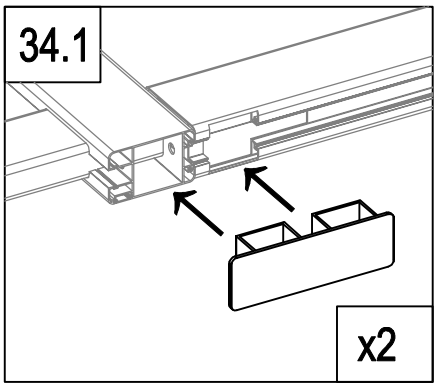

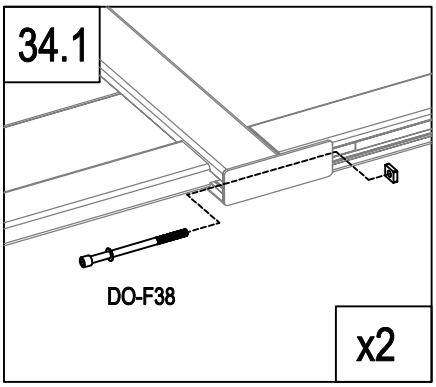

	AT-30	1
	AT-30a	1
	AT-17a	2

	DO-F38	2
	DO-F35	4

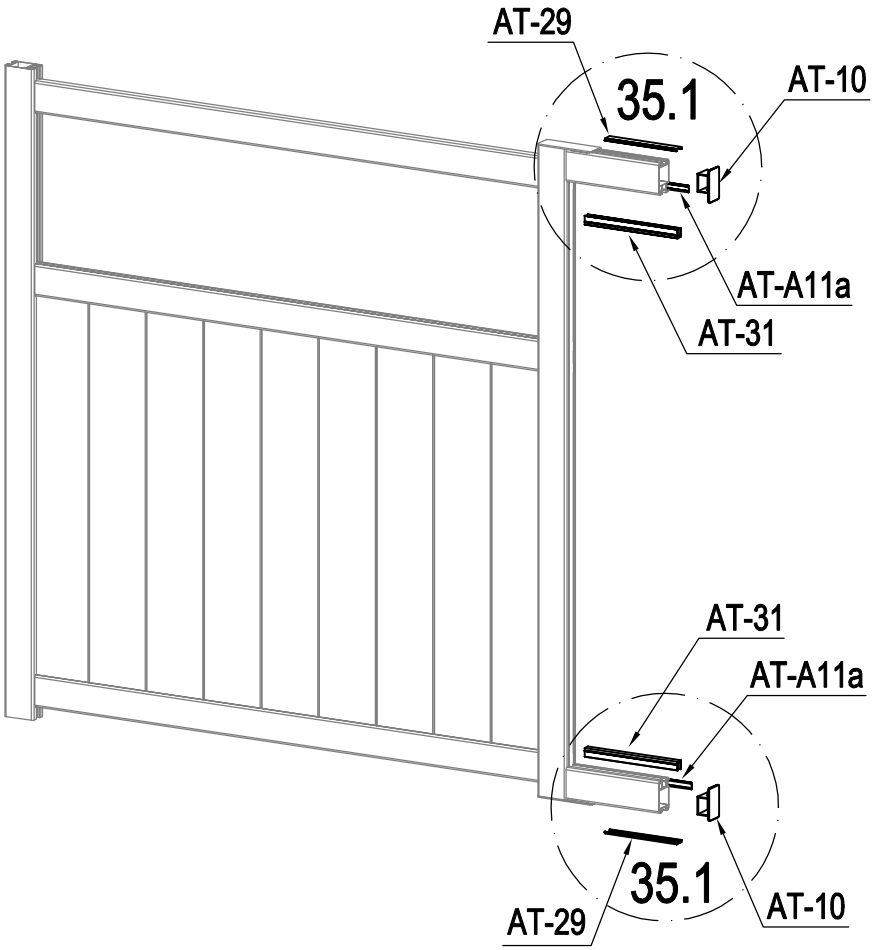

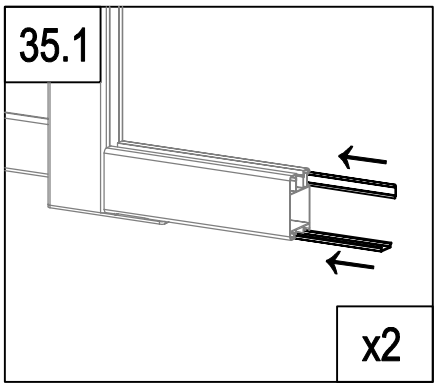

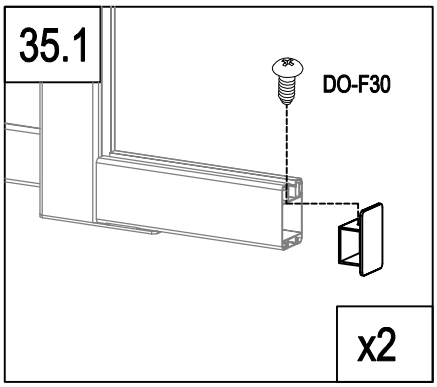

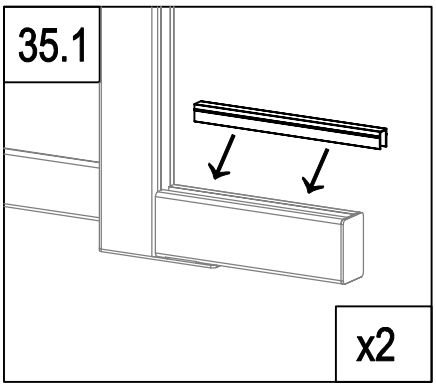

	AT-29	2
	AT-A11a	2
	AT-31	2

	AT-10	2
	DO-F30	2

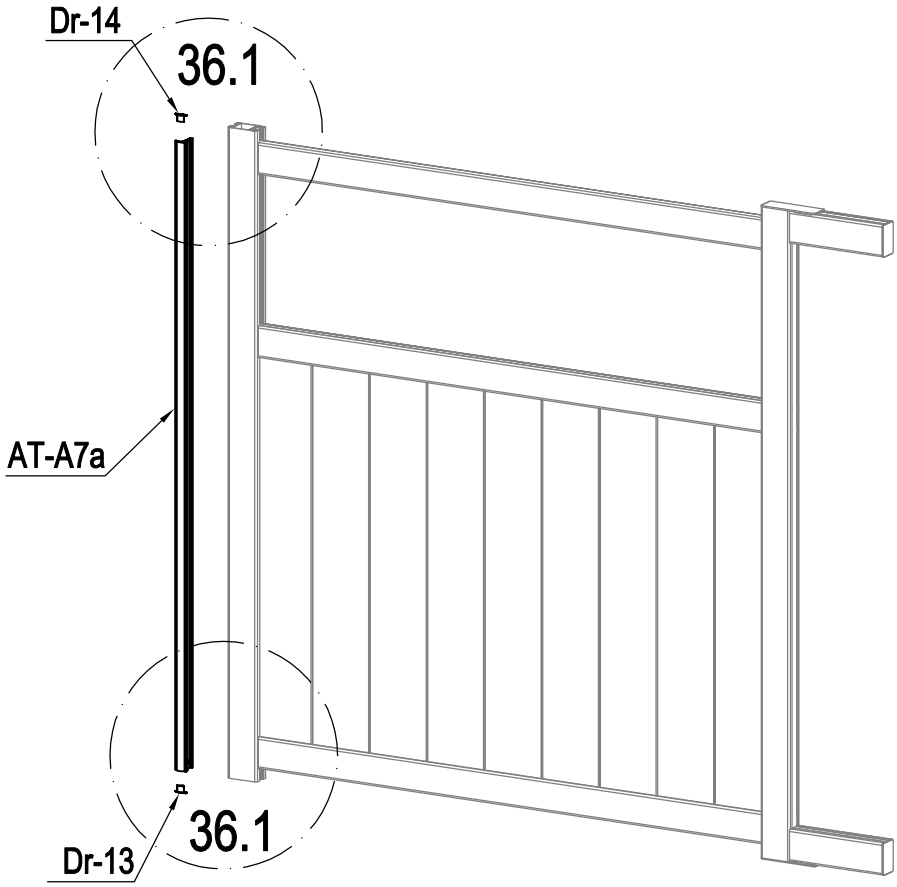

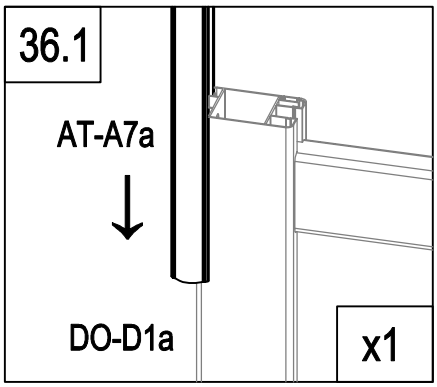

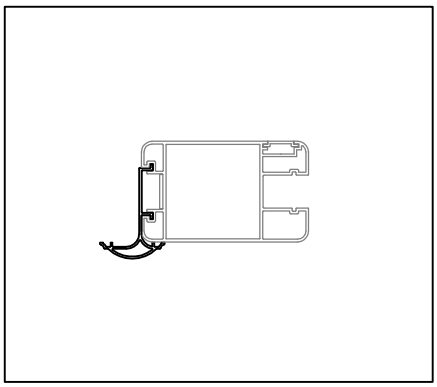

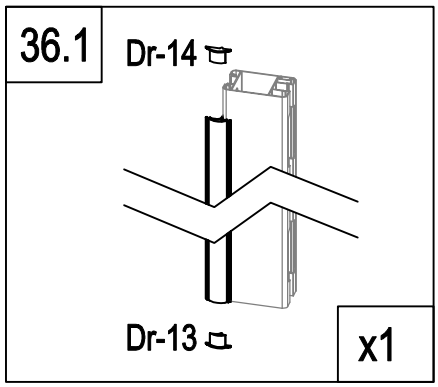

	AT-A7a	1
	Dr-13	1
	Dr-14	1

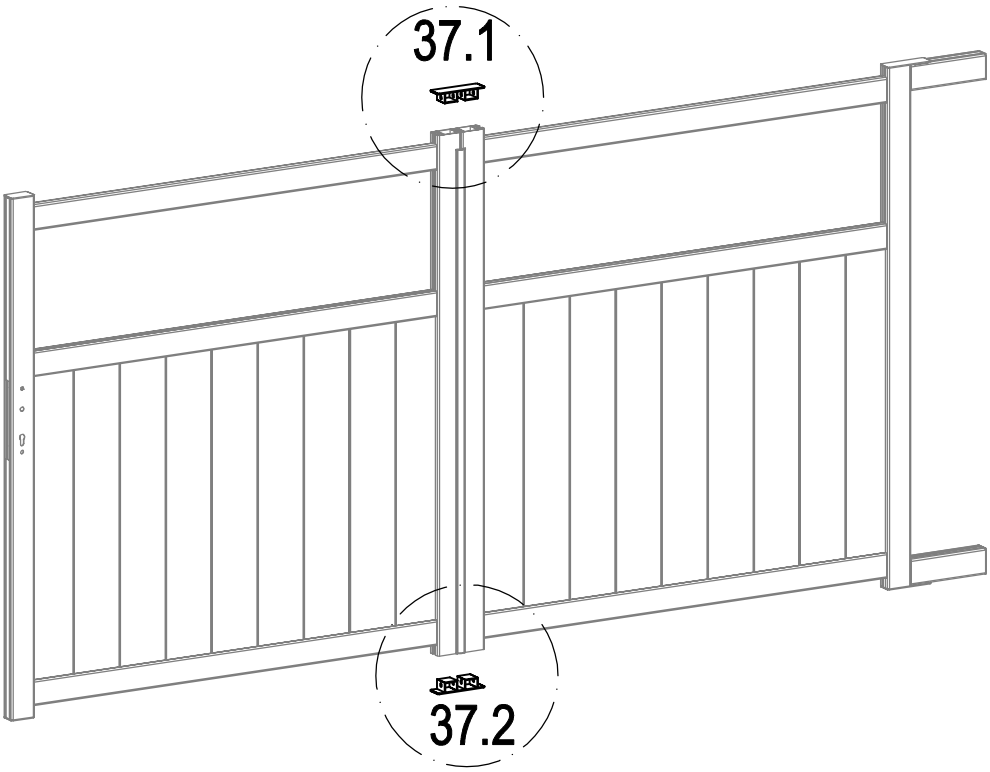

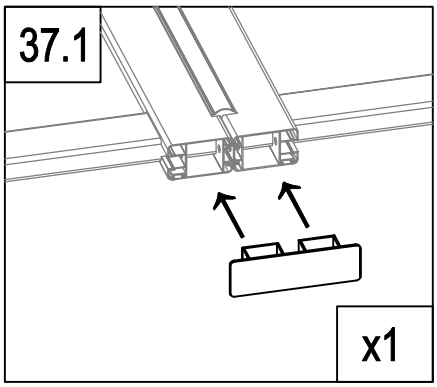

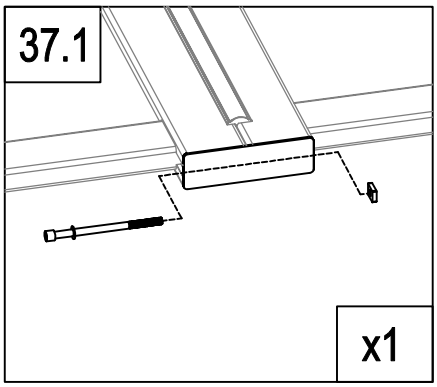

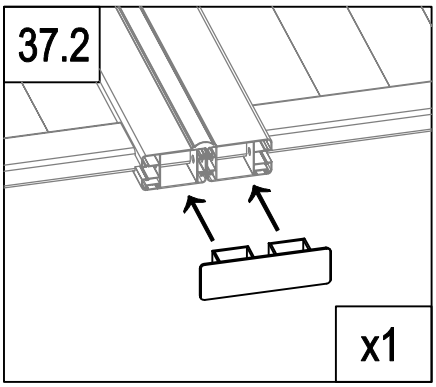

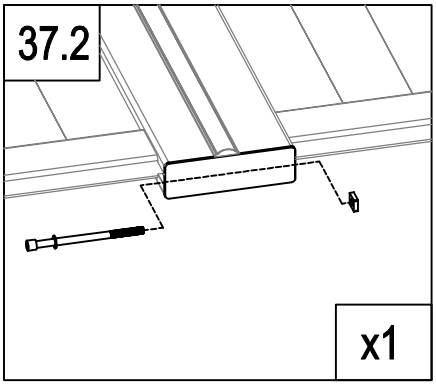

	AT-17	2
	DO-F38	2

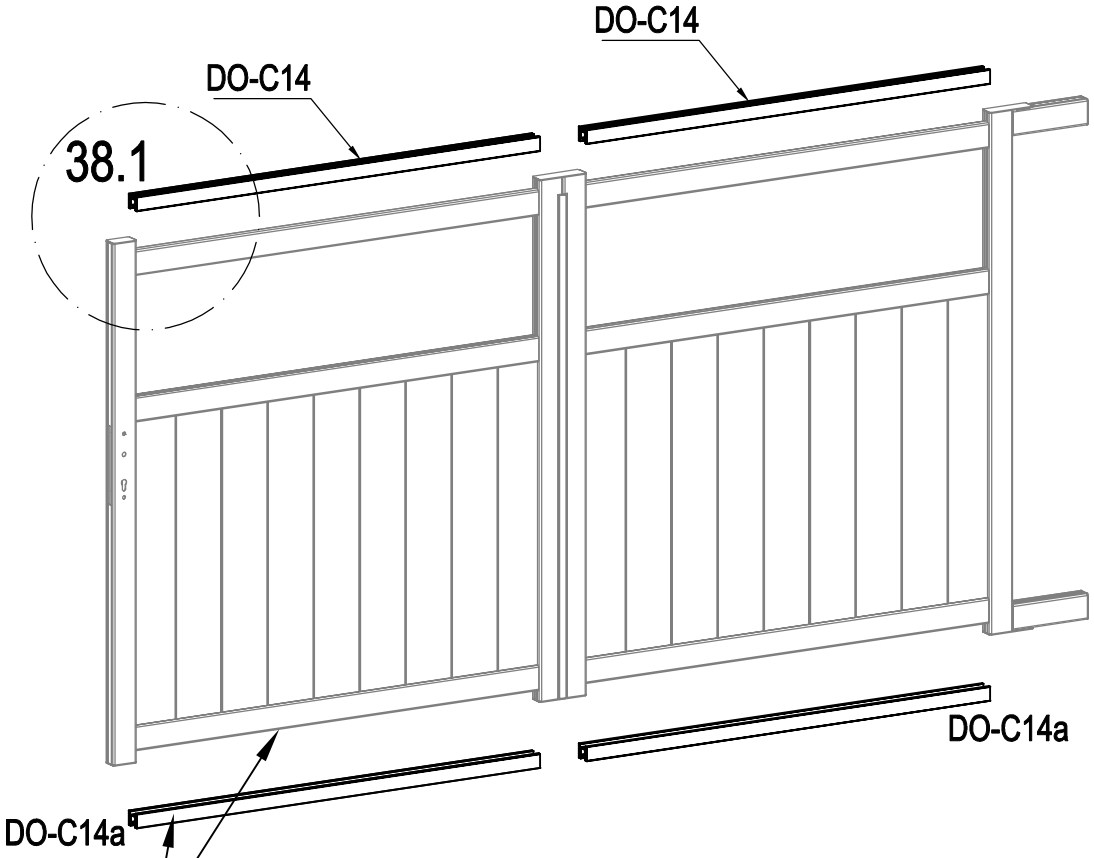

EN: These parts are made for connecting your gate's automation
FR: Ces pièces sont faites pour relier l'automatisation de votre portail
DE: Diese Teile sind für den Anschluss der Automatisierung Ihres Tores vorgesehen
ES: Estas piezas están hechas para conectar la automatización de su puerta
PT : Estas peças são feitas para ligar a automatização do seu portão
IT: Queste parti sono realizzate per collegare l'automazione del vostro cancello
NL: Deze onderdelen zijn gemaakt voor het aansluiten van de automatisering van uw poort.
PL: Te części są wykonane do podłączenia automatyki bramy.

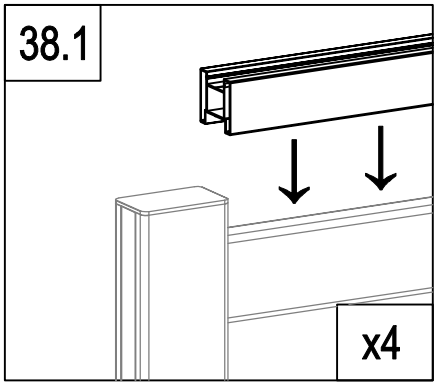

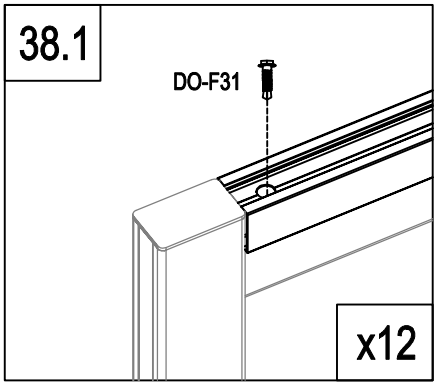

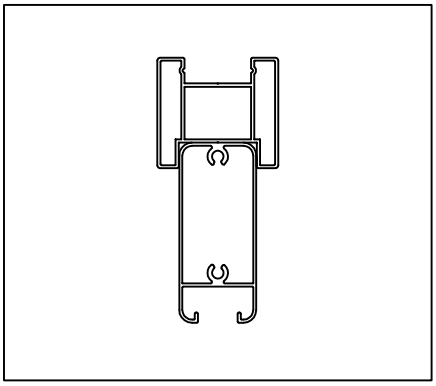

	DO-C14	2
	DO-C14a	2
	DO-F31	12

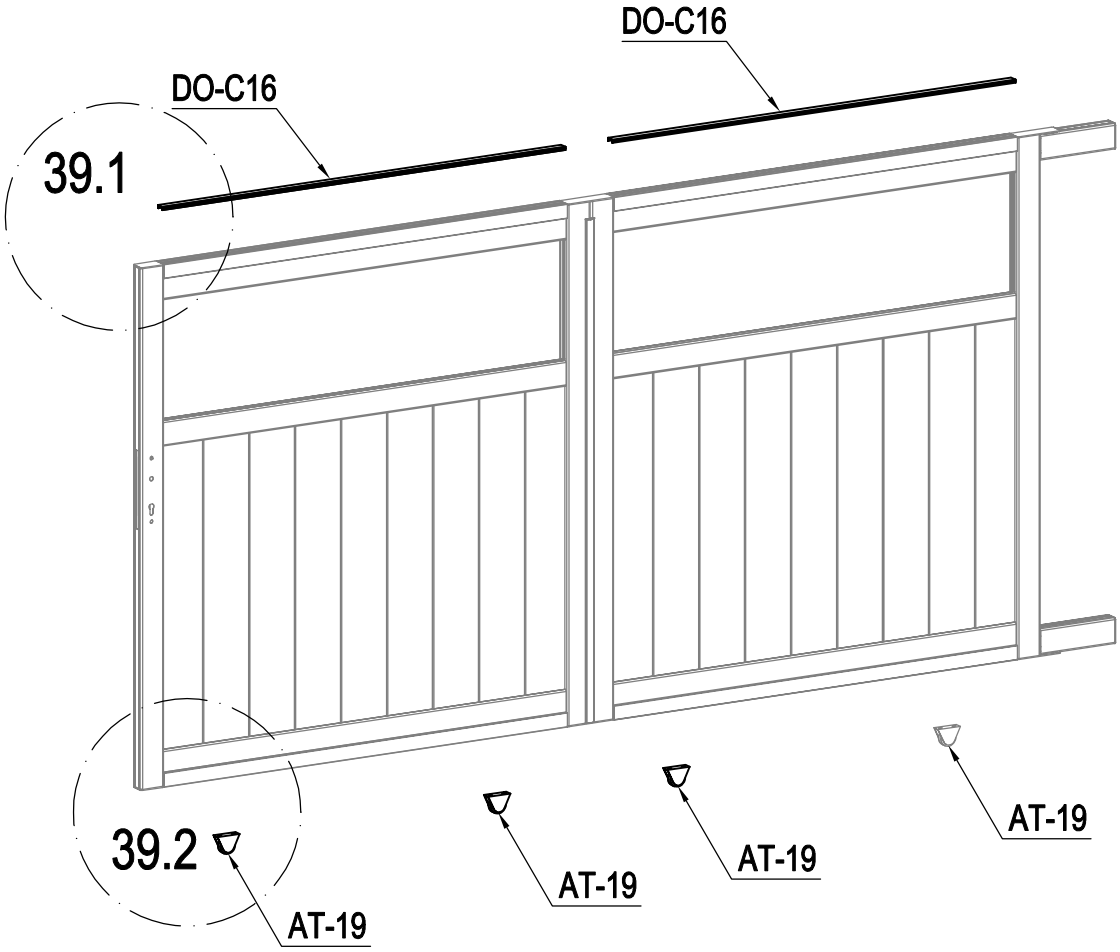

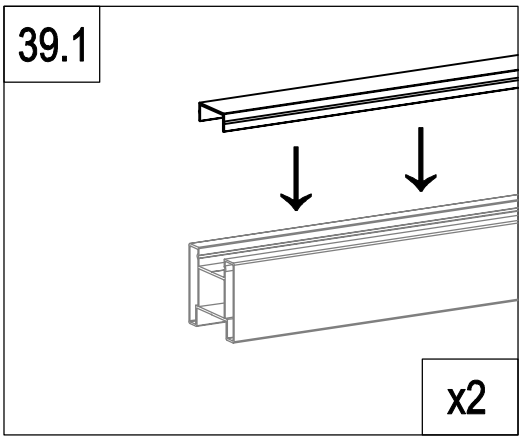

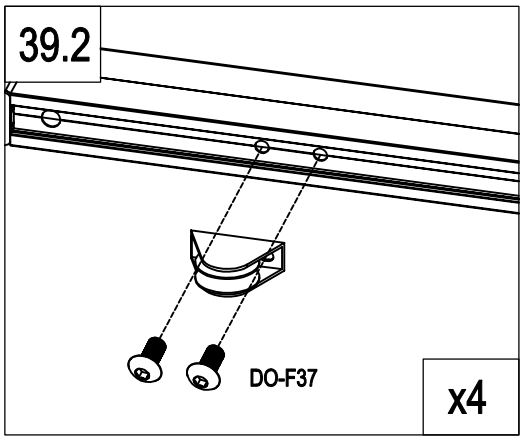

	DO-C16	2
	AT-19	4
	DO-F37	8

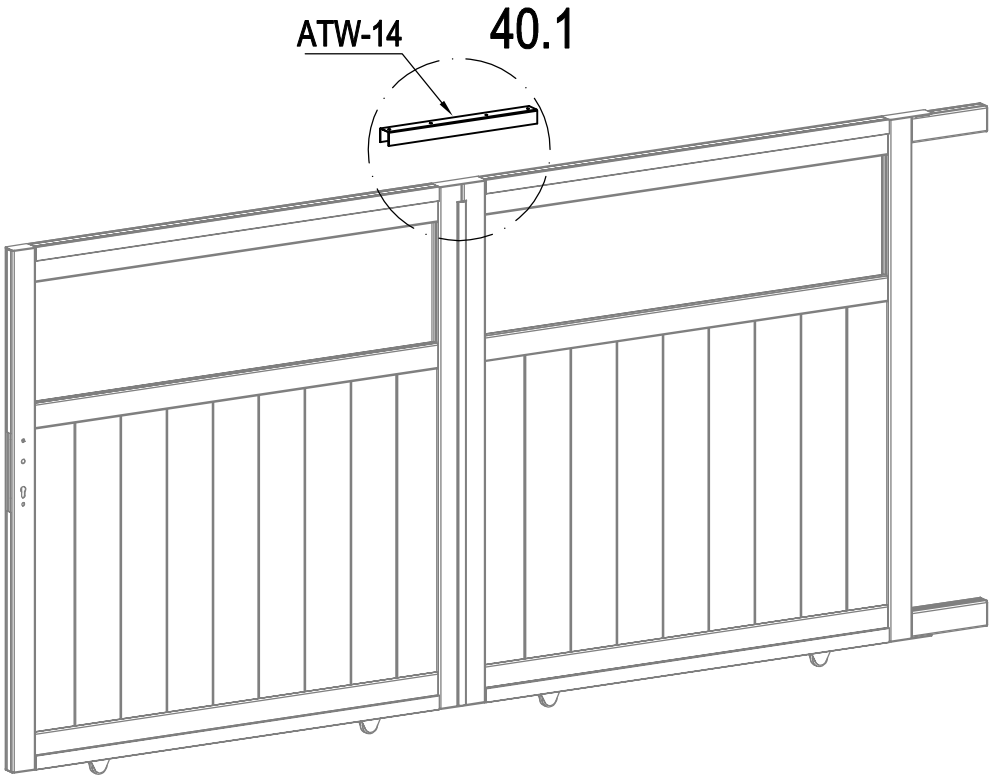

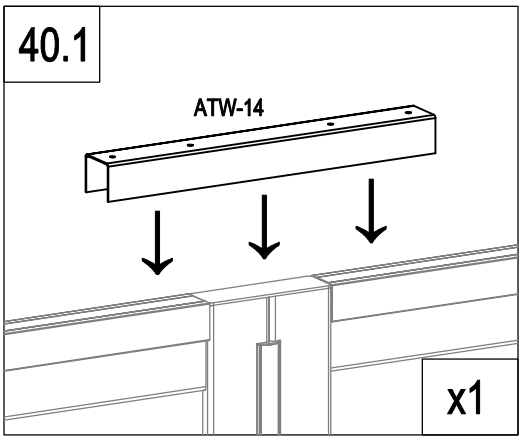

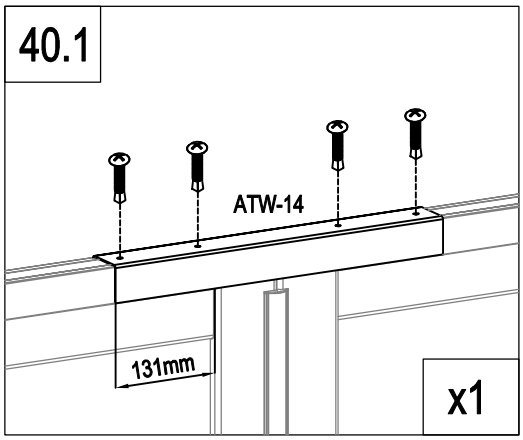

	ATW-14	1
	DO-F32	4

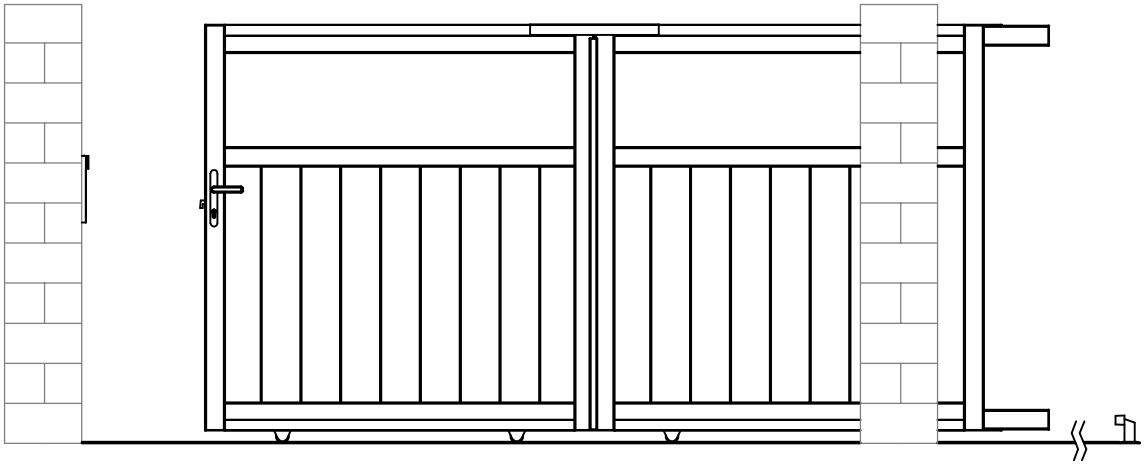

L : P 44~49

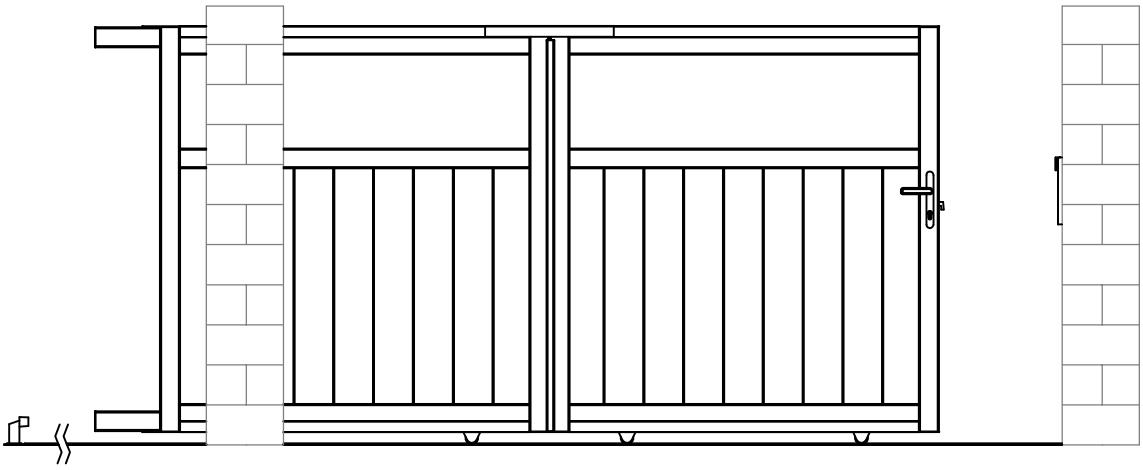

R : P 50~55

L

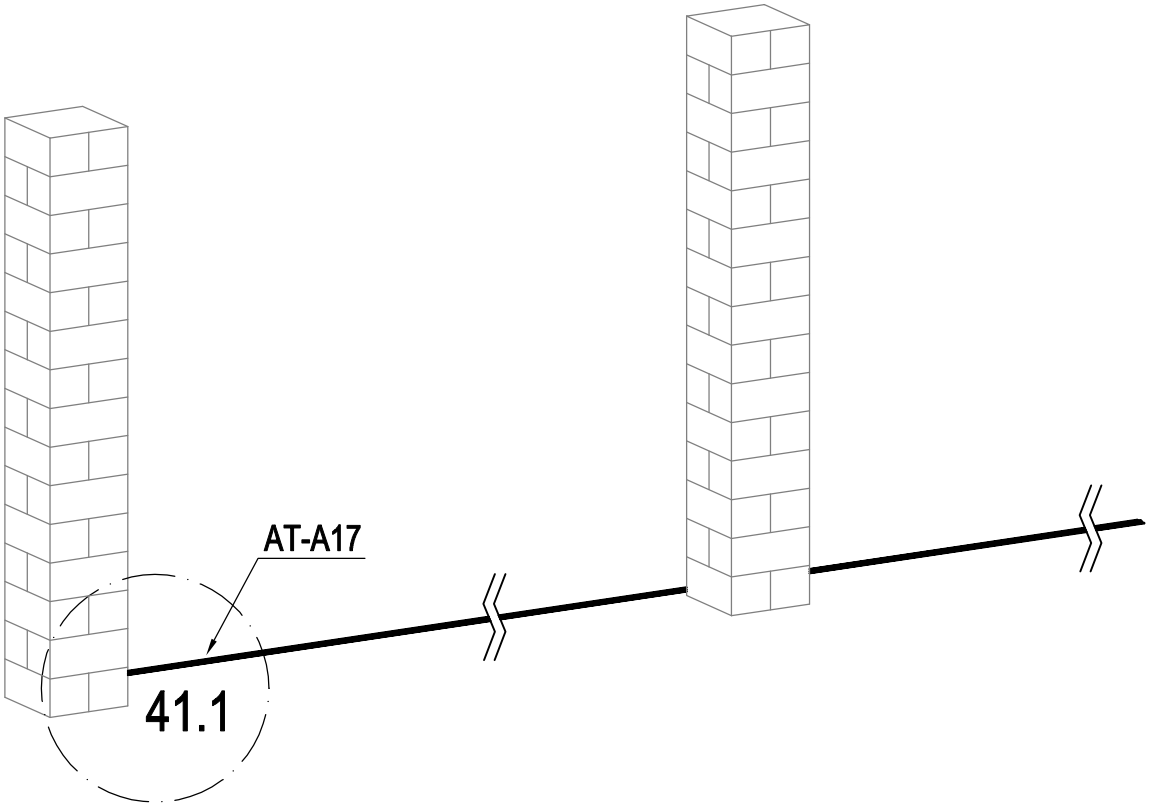

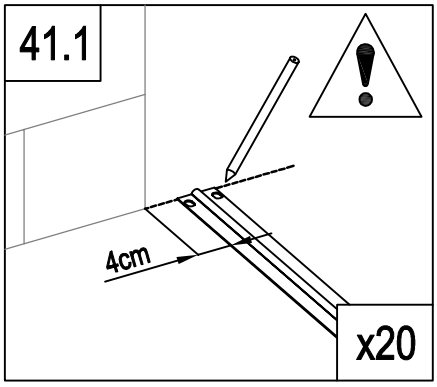

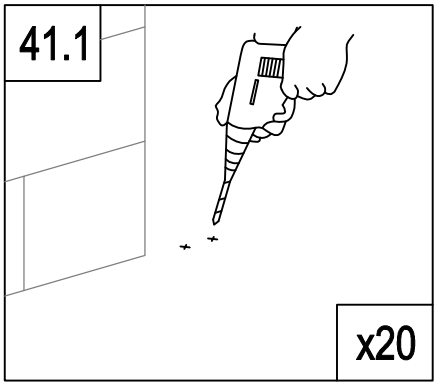

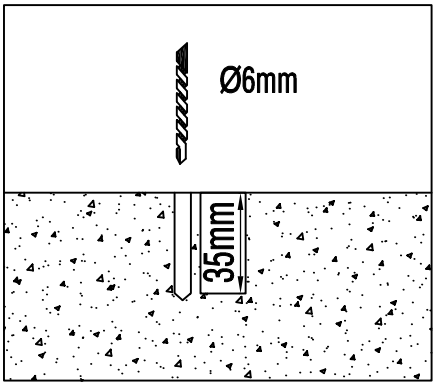

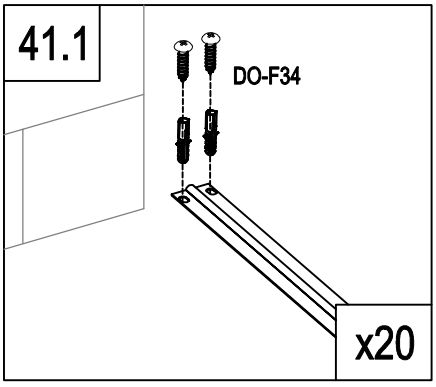

	AT-A17	5
	DO-F34	40

L

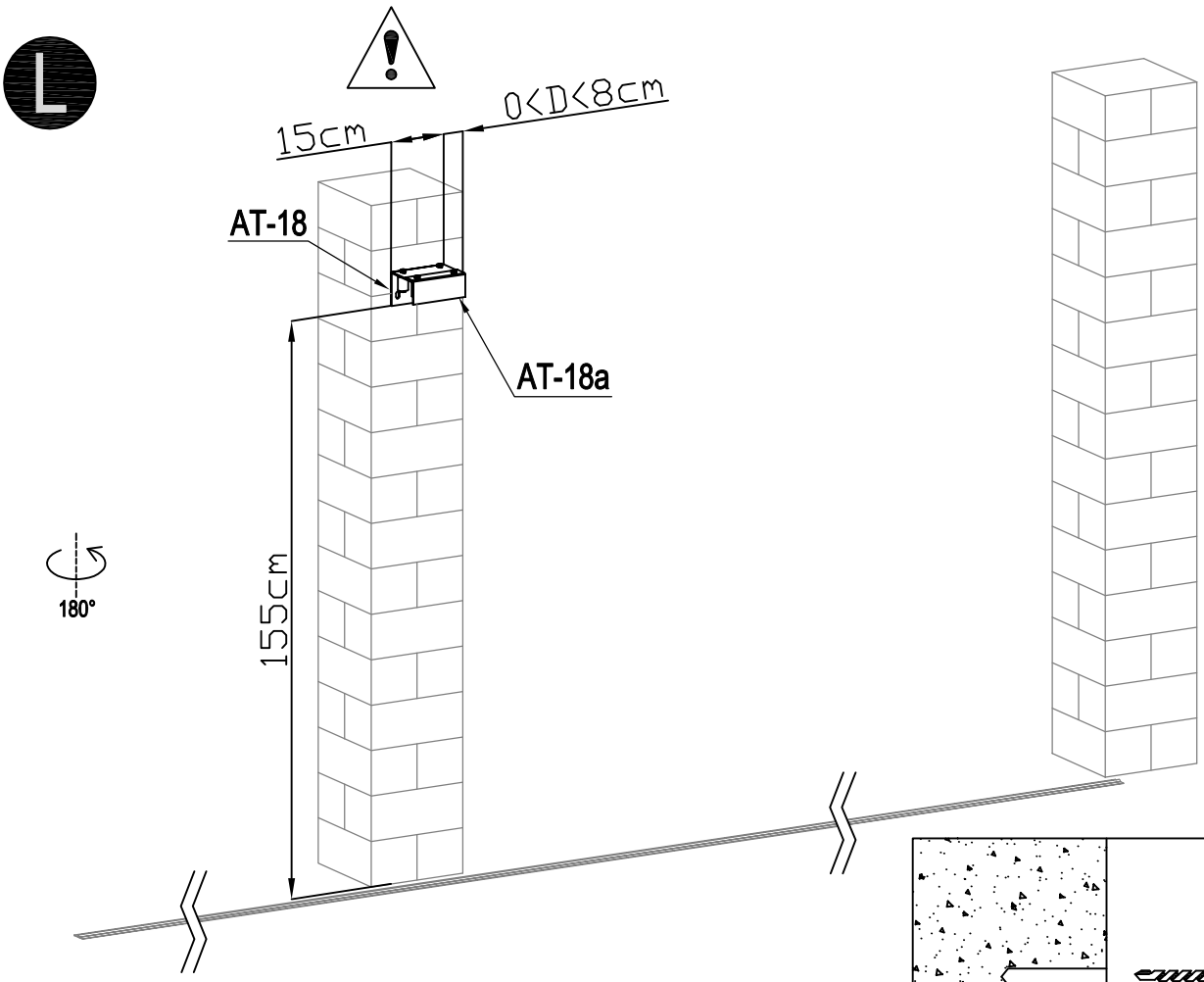

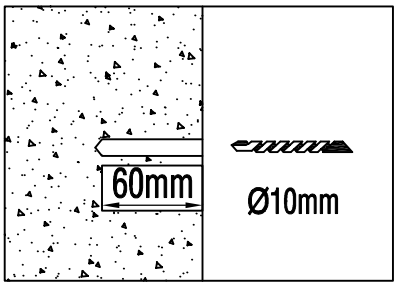

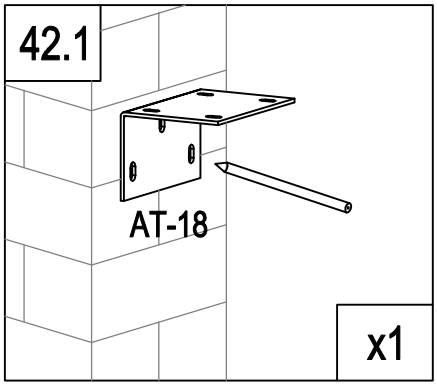

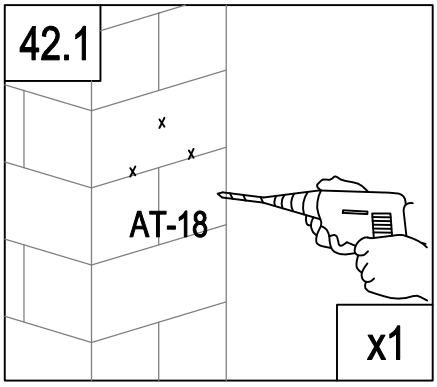

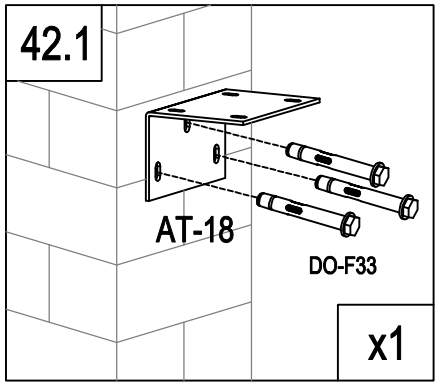

	AT-18	1
	AT-18a	1
	AT-20	4
	DO-F33	3

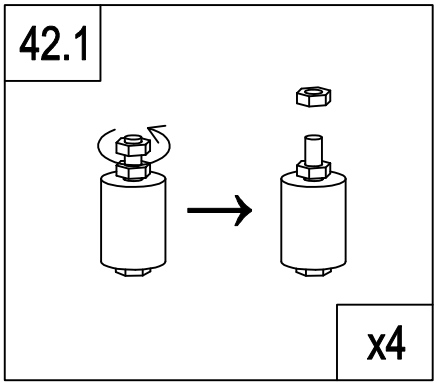

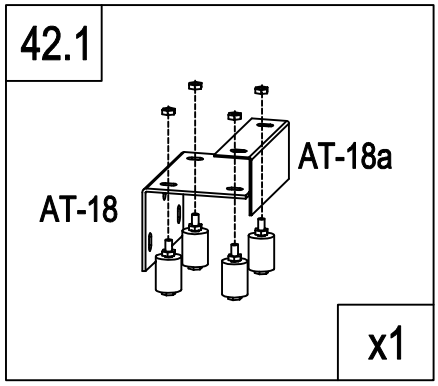

L

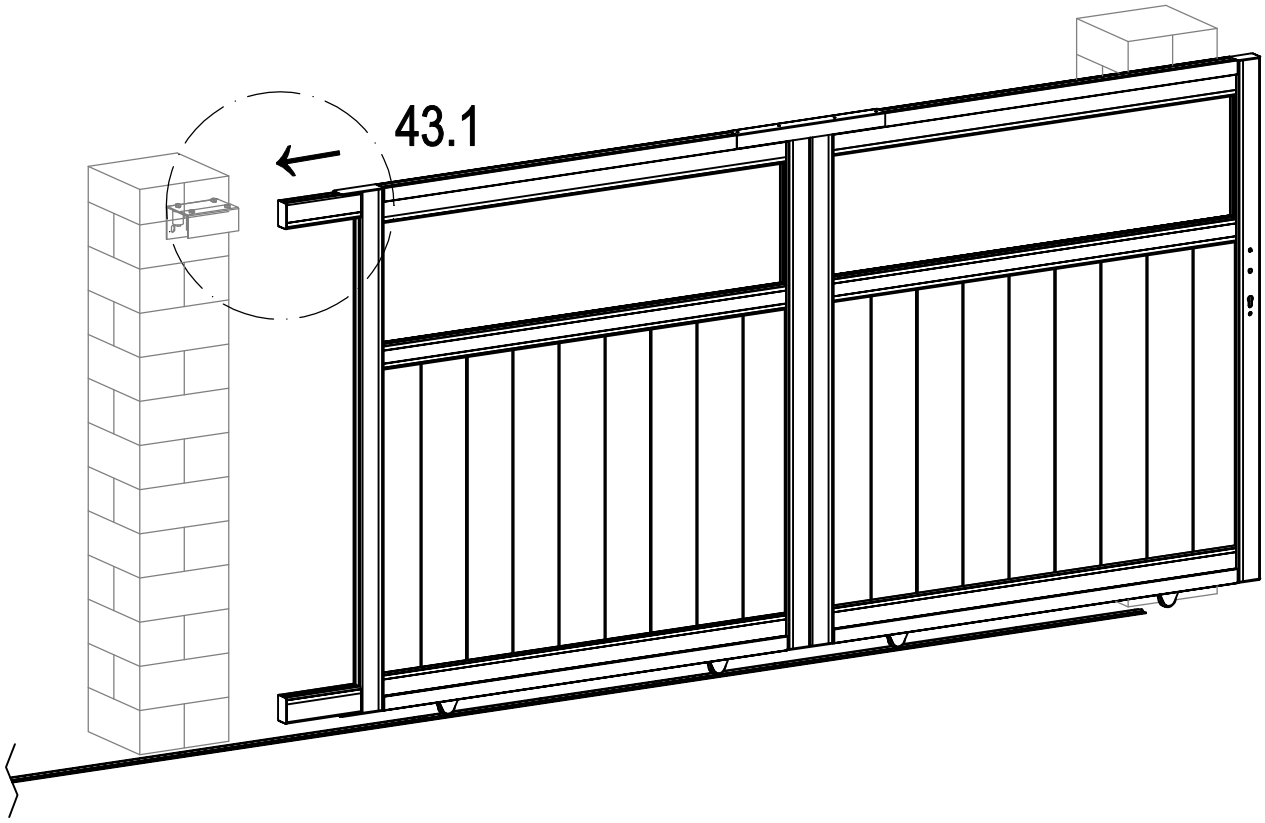

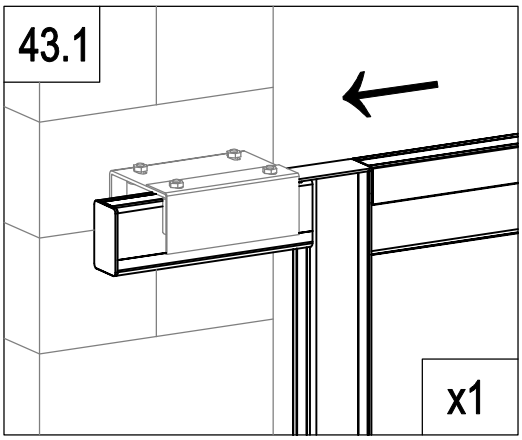

L

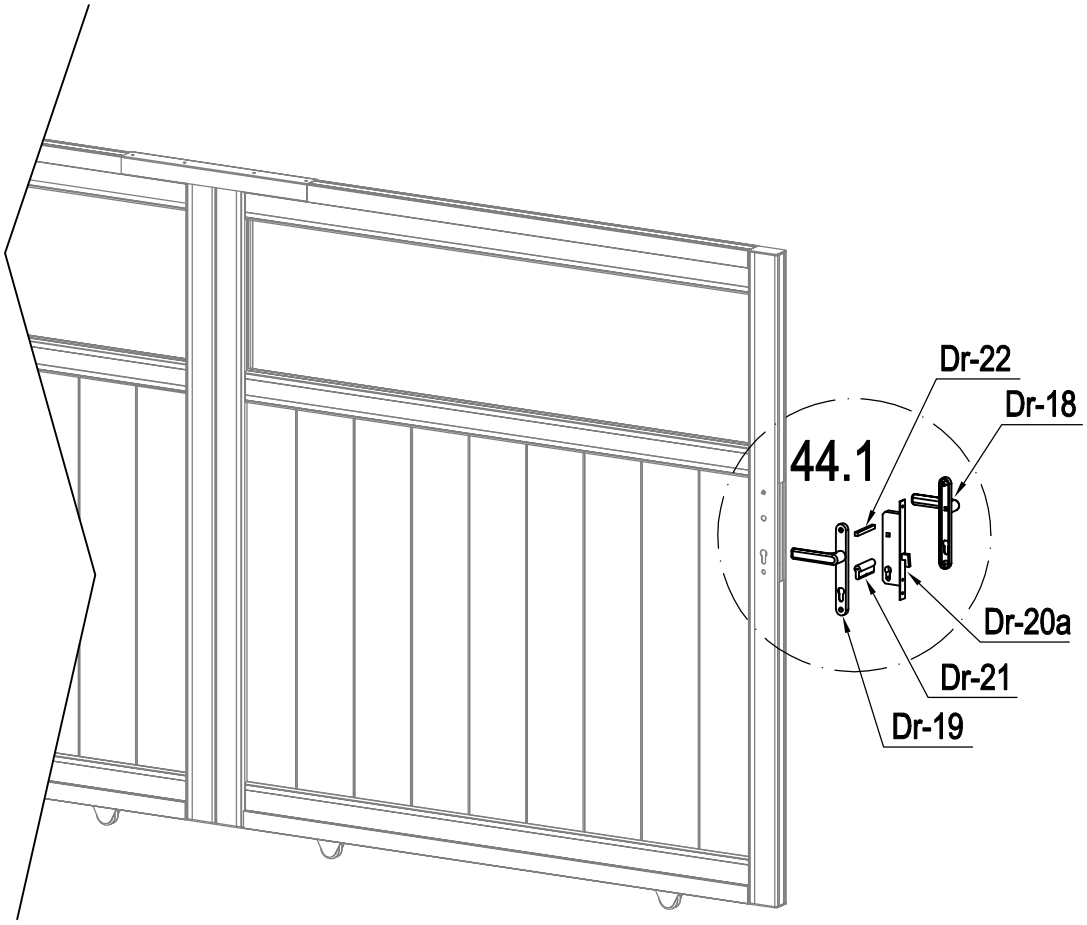

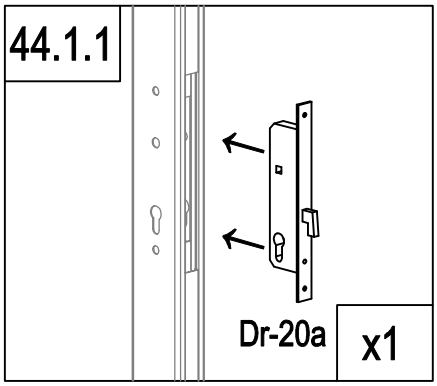

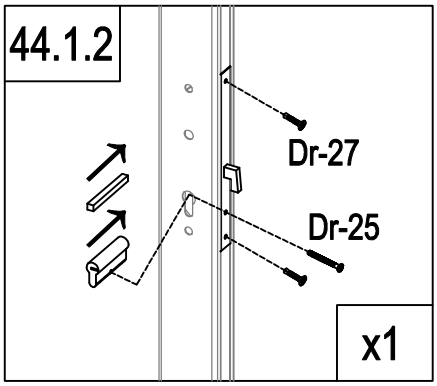

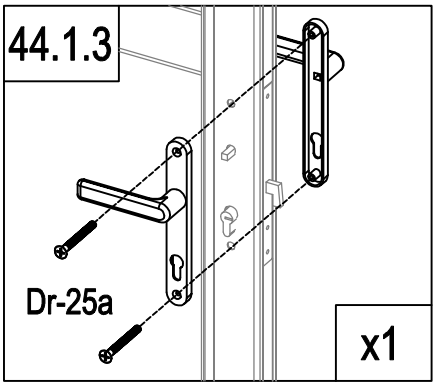

	Dr-20a	1
	Dr-21	1
	Dr-22	1
	Dr-25	1

	Dr-18	1
	Dr-19	1
	Dr-25a	2
	Dr-27	2

L

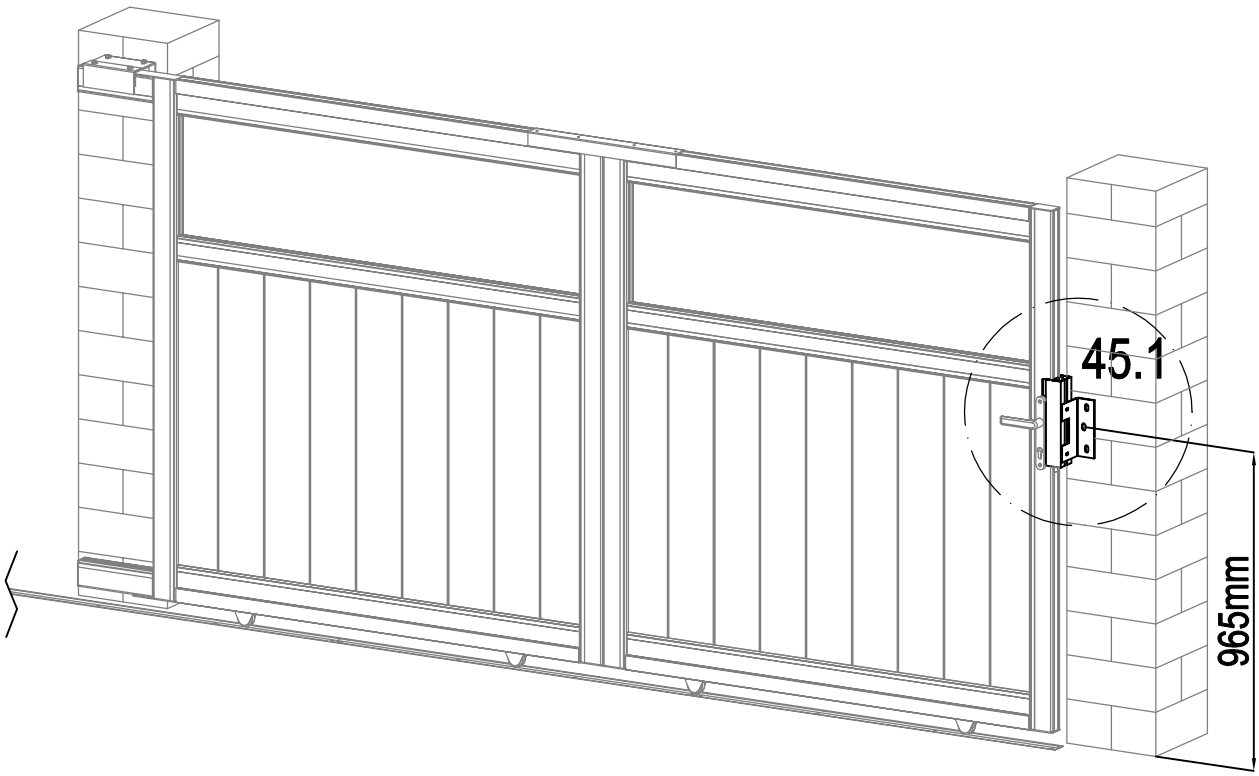

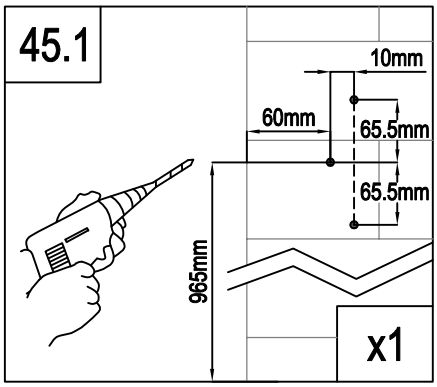

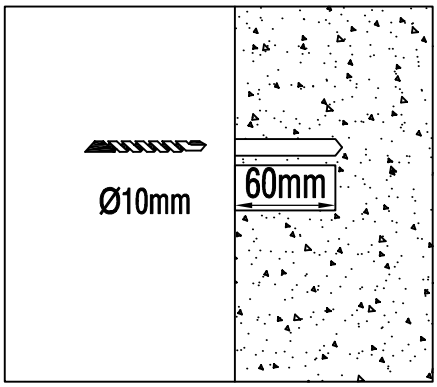

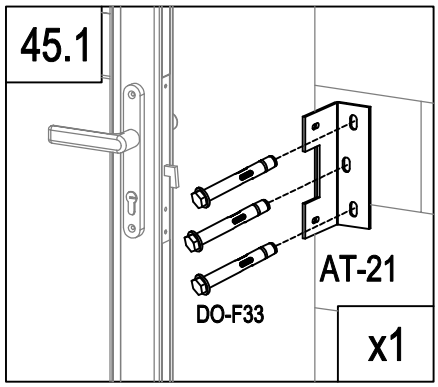

	AT-16	1
	AT-21	1
	DO-F36	2
	DO-F33	3
	AT-22J	3

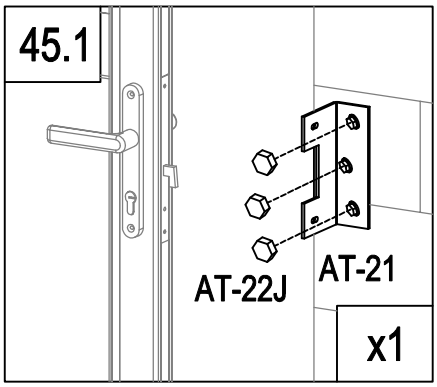

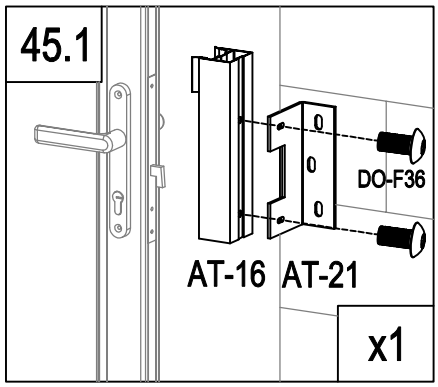

L

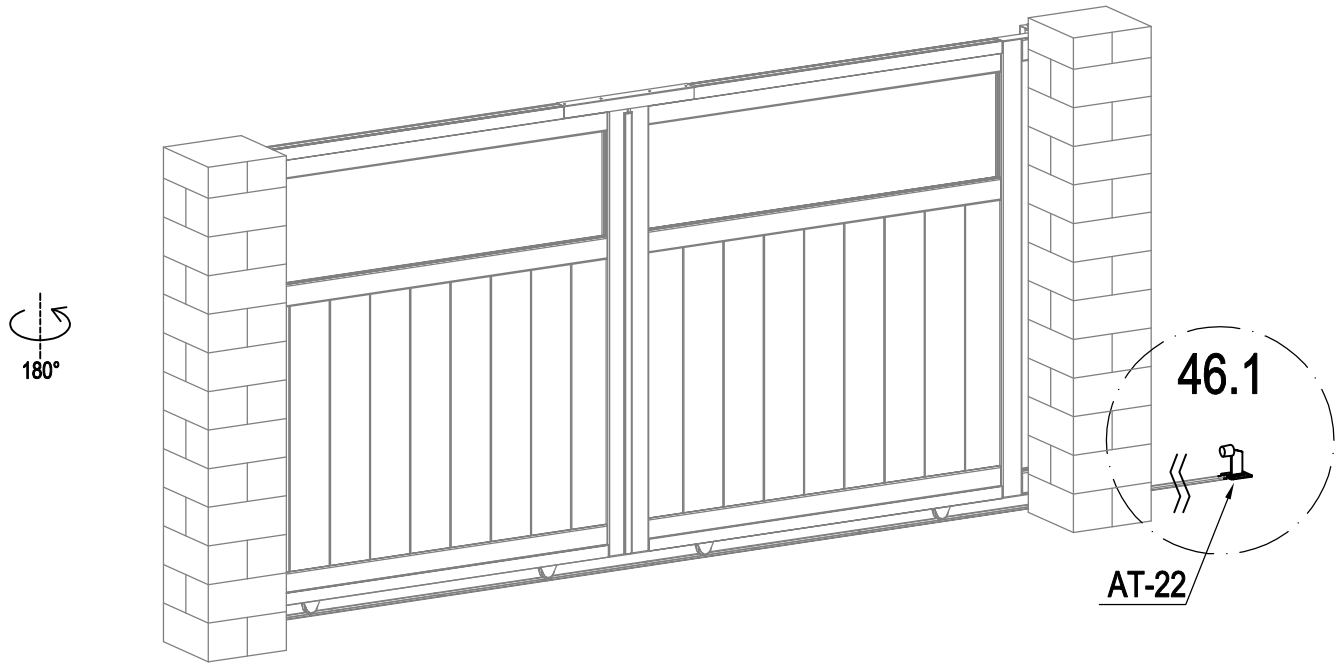

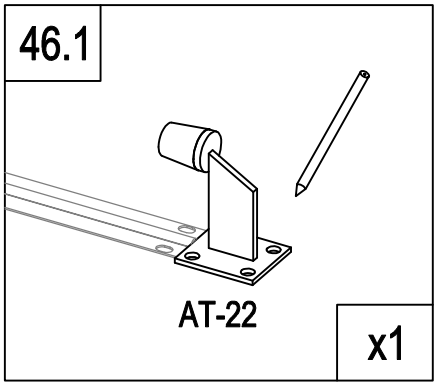

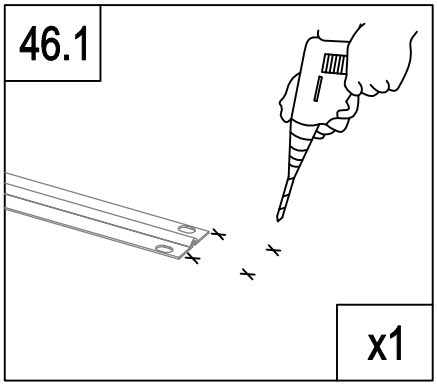

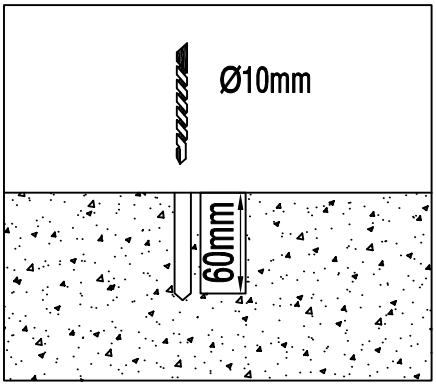

	AT-22	1
	DO-F33	4
	AT-22J	4

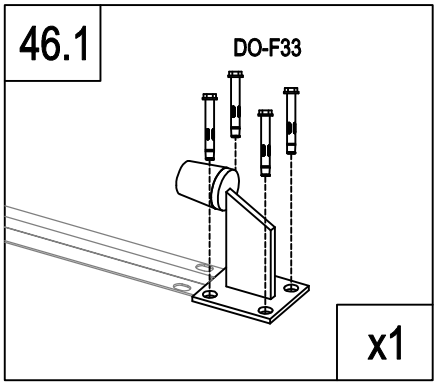

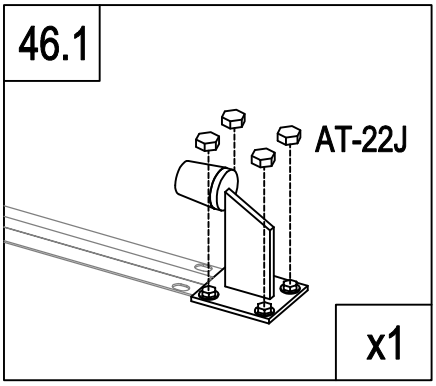

R

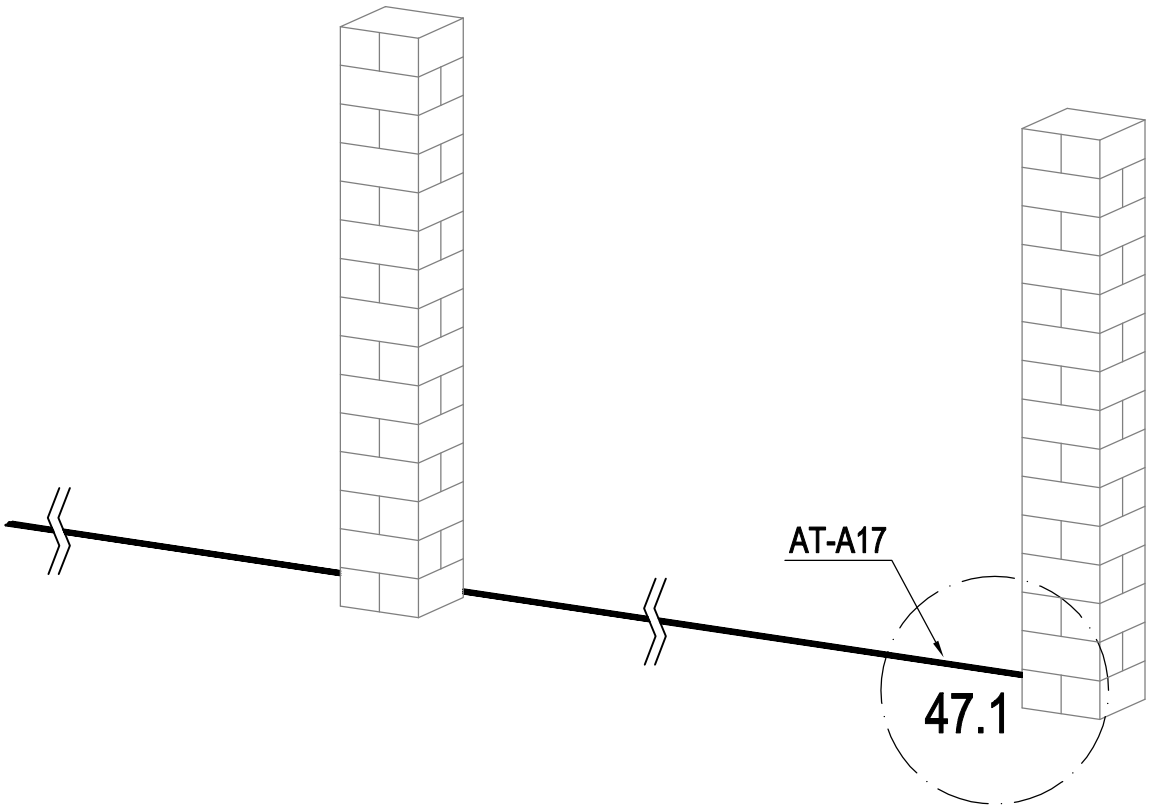

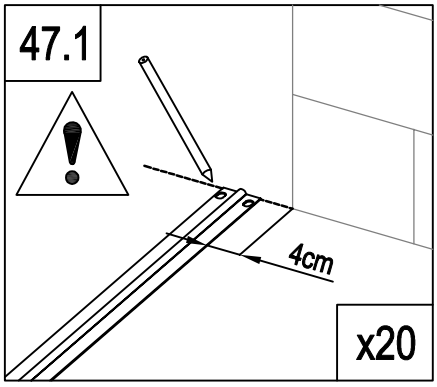

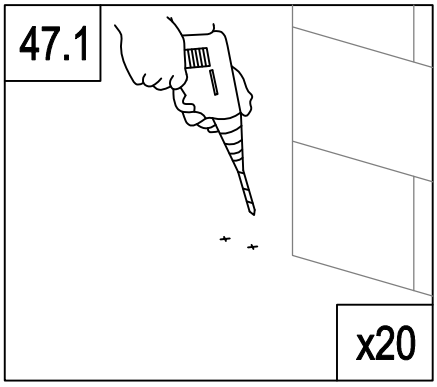

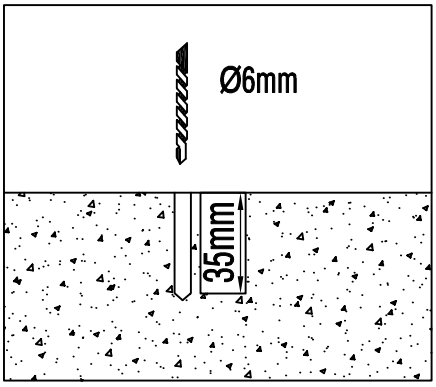

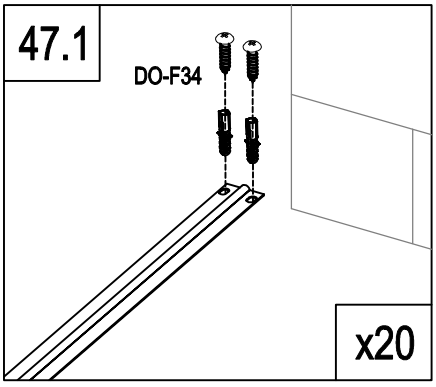

	AT-A17	5
	DO-F34	40

R

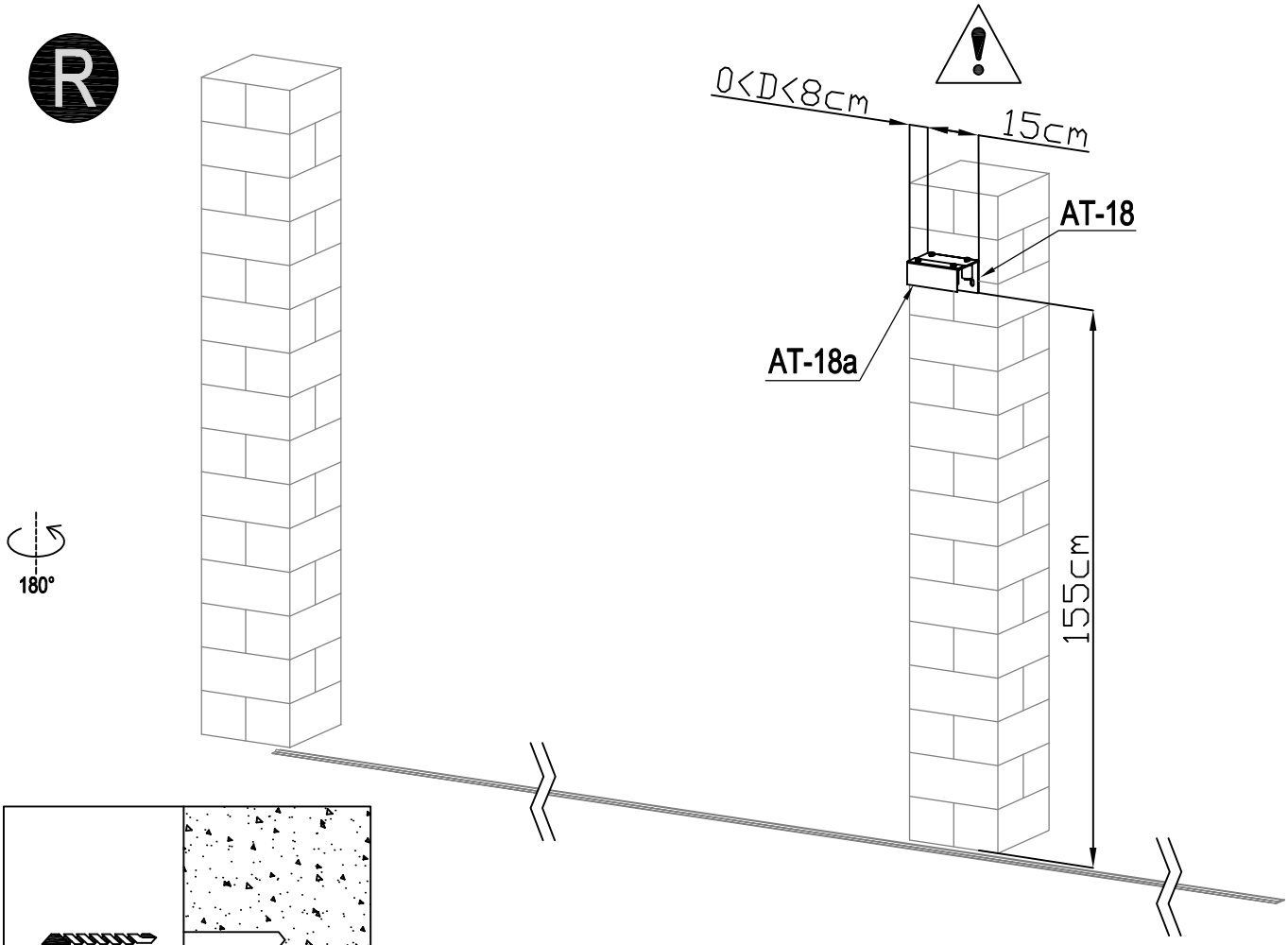

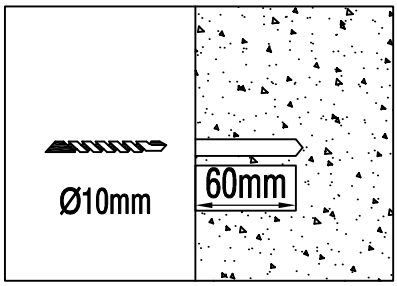

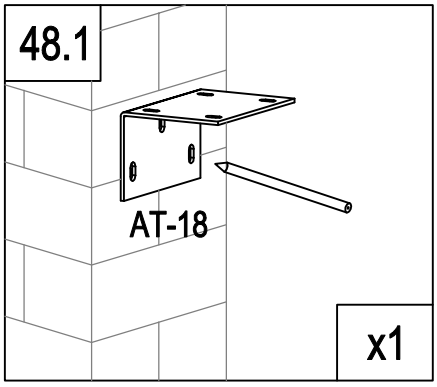

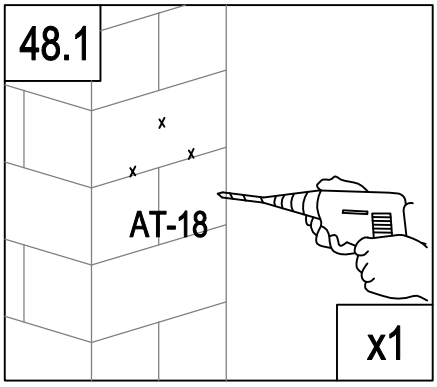

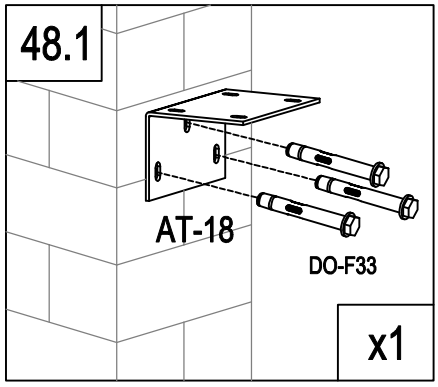

	AT-18	1
	AT-18a	1
	AT-20	4
	DO-F33	3

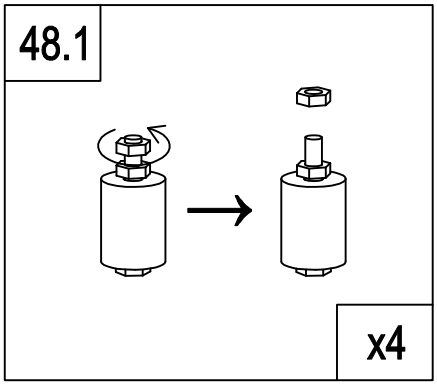

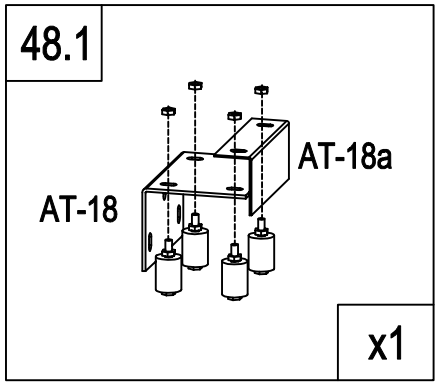

R

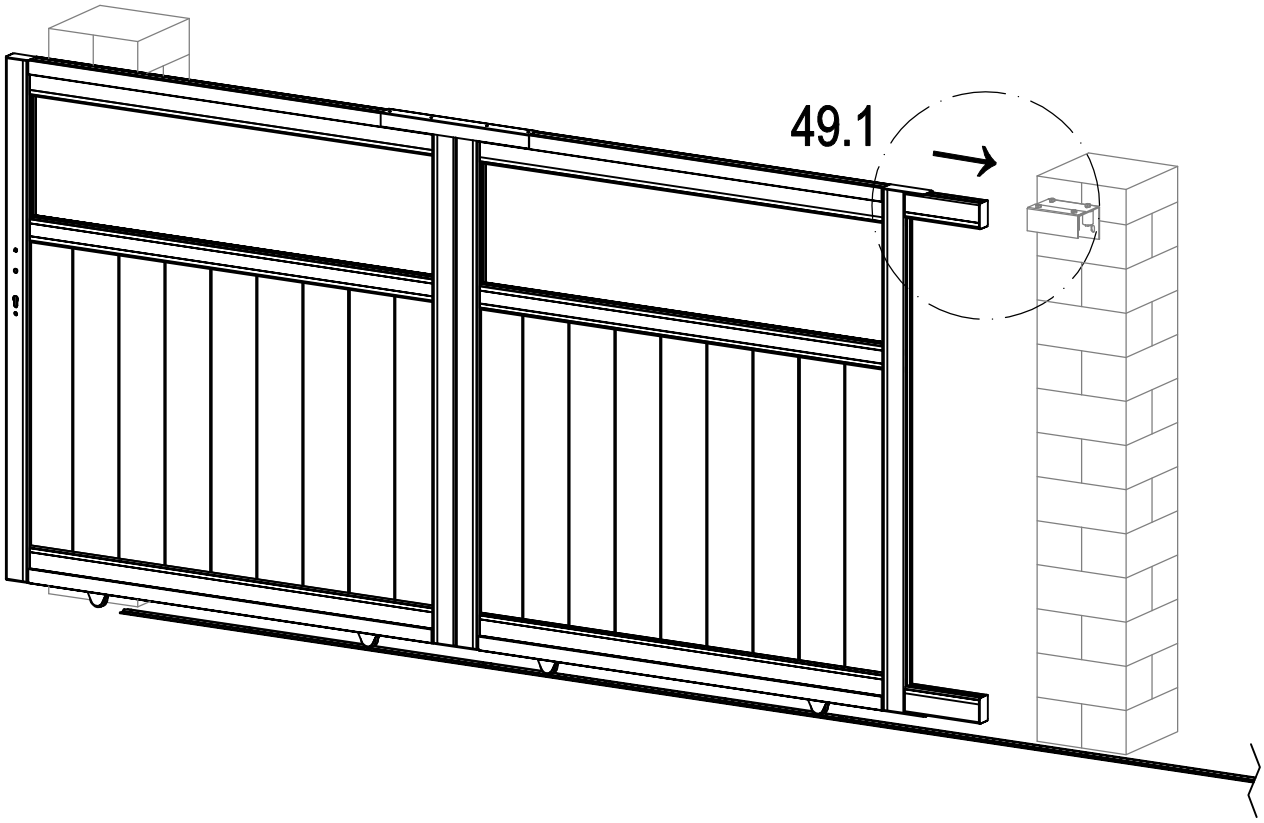

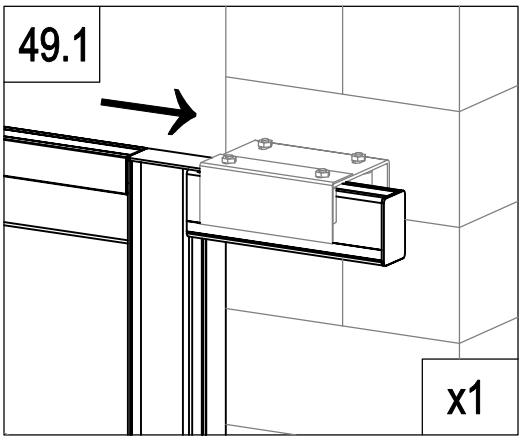

R

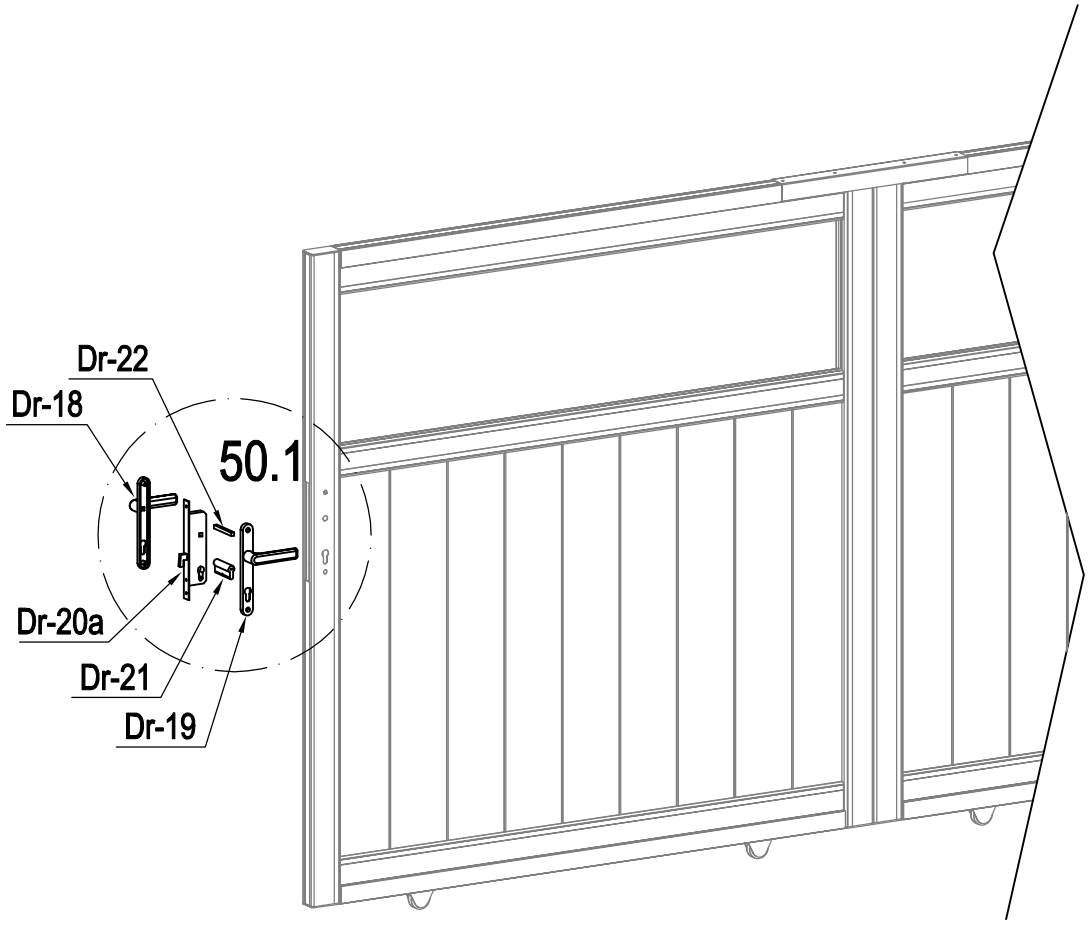

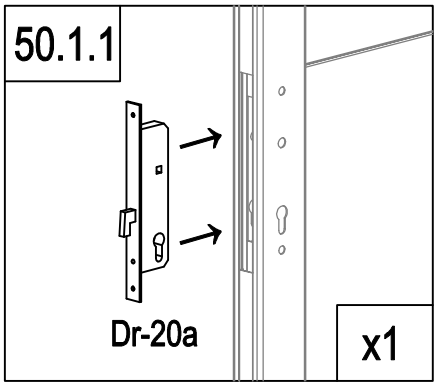

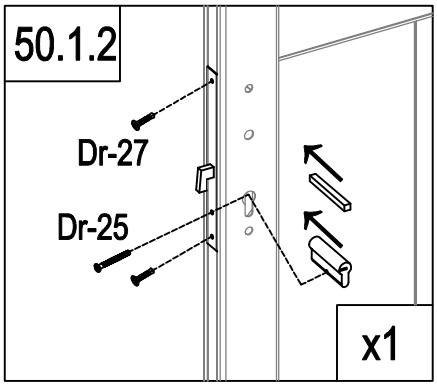

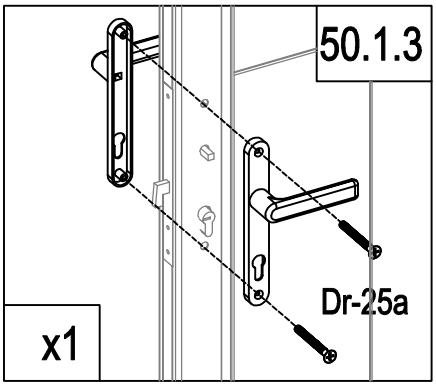

	Dr-20a	1
	Dr-21	1
	Dr-22	1
	Dr-25	1

	Dr-18	1
	Dr-19	1
	Dr-25a	2
	Dr-27	2

R

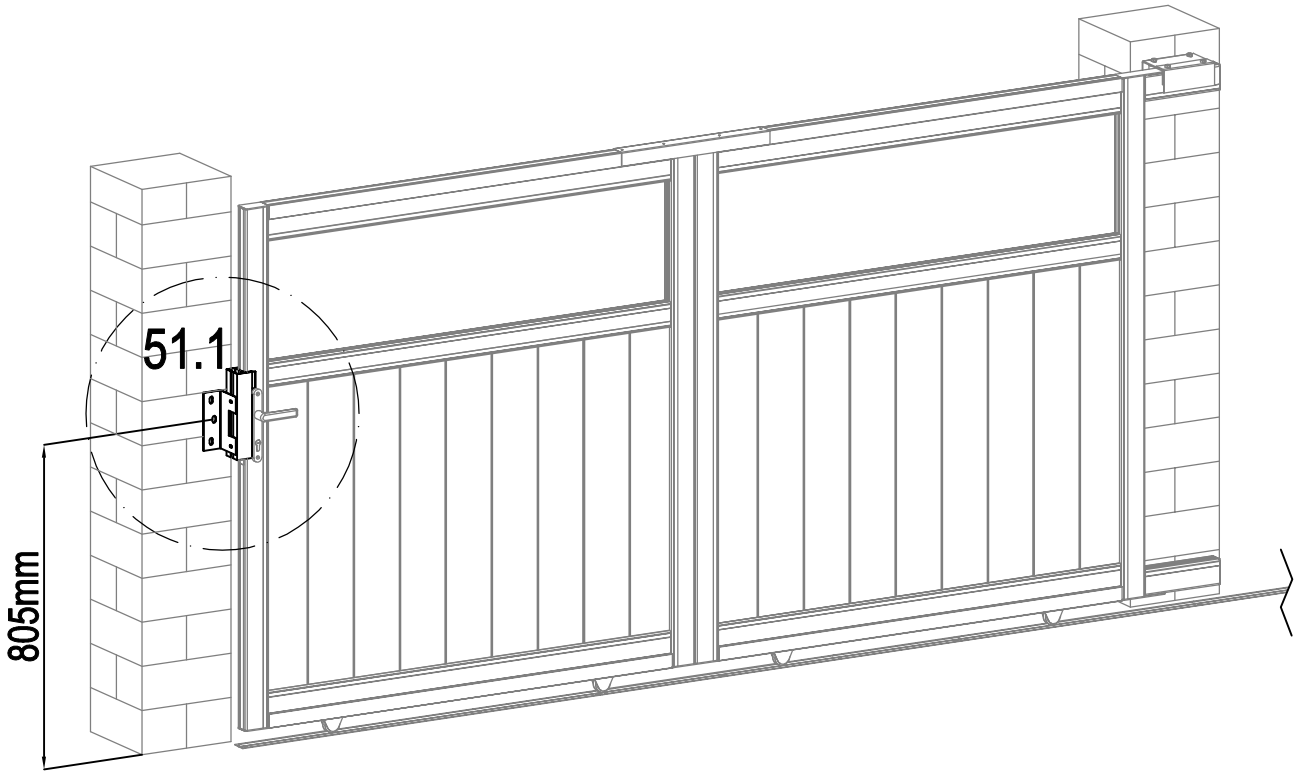

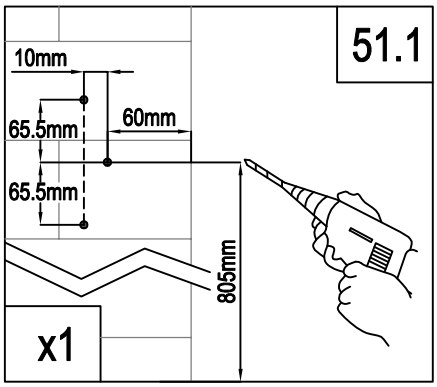

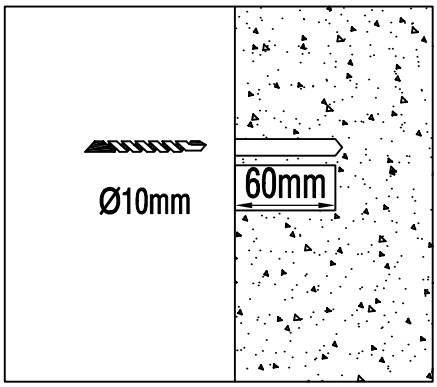

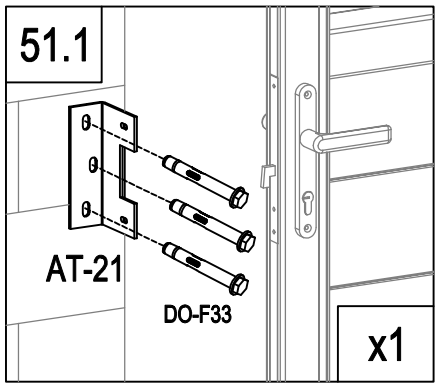

	AT-16	1
	AT-21	1
	DO-F36	2
	DO-F33	3
	AT-22J	3

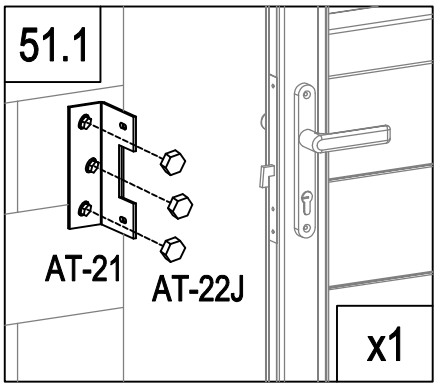

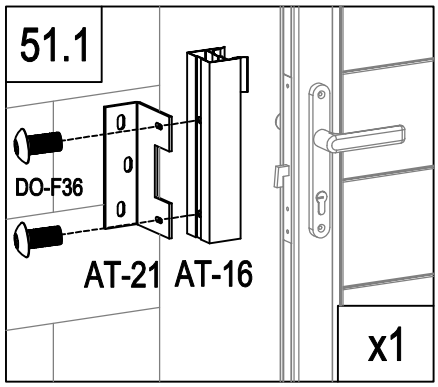

R

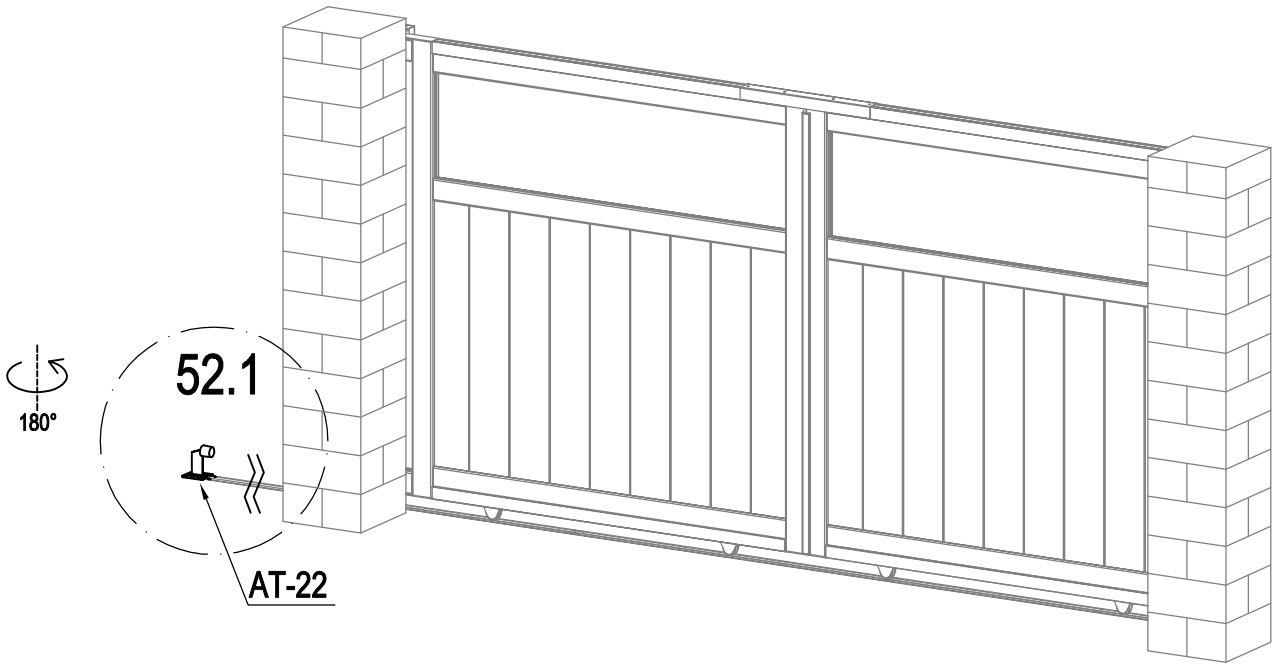

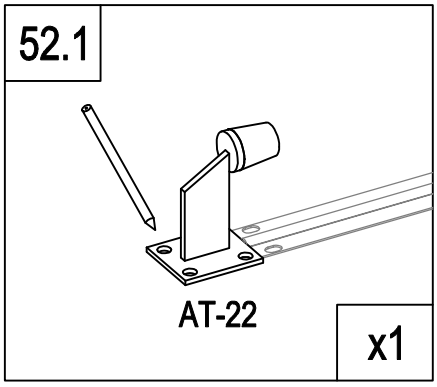

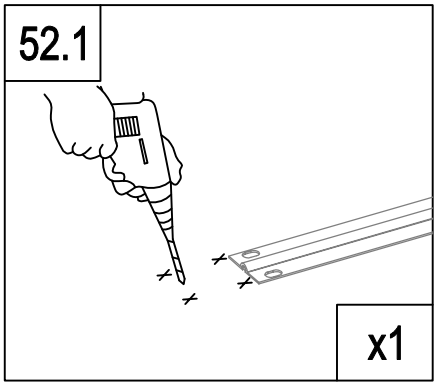

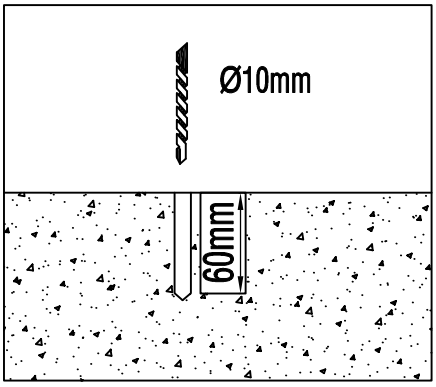
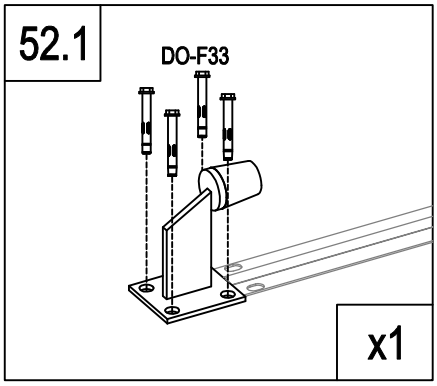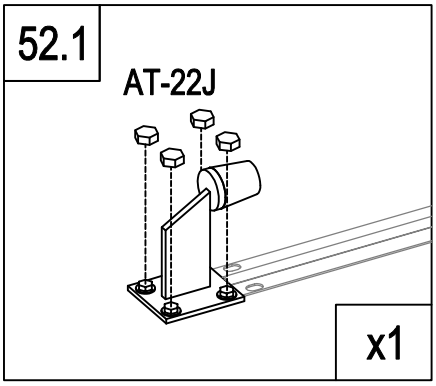
	AT-22	1
	DO-F33	4
	AT-22J	4