CASANOOV

DO 400C140

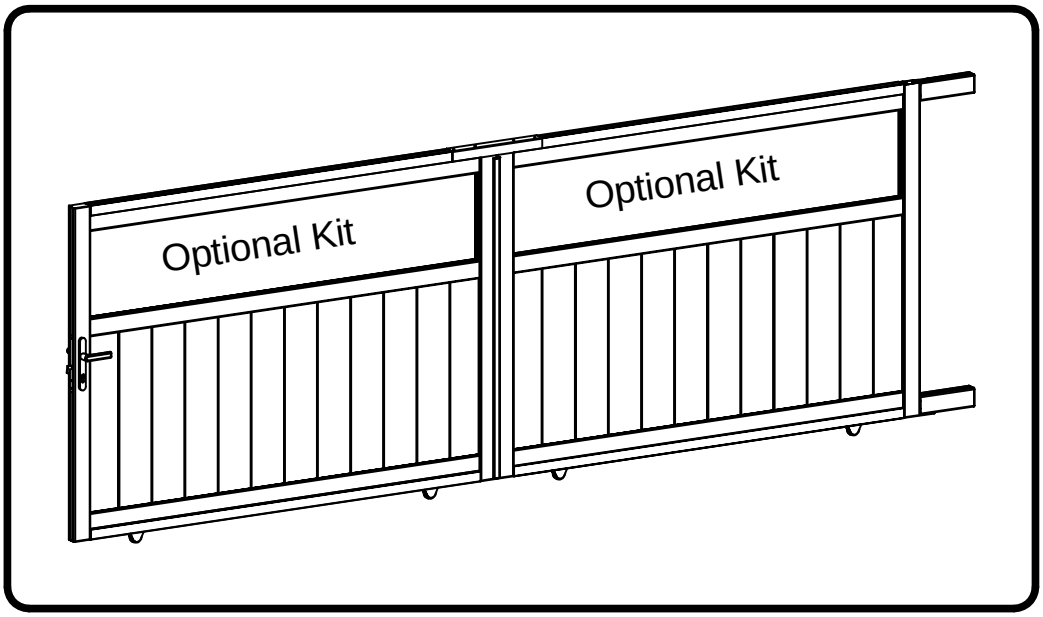

COM-000334	[x1]
COM-000335	[x1]
COM-000336	[x1]
COM-000*DESIGN*	[x1]

*Selon modèle

FR EN ES DE IT NL PL PT FI SE DK CE

NOTICE DE MONTAGE / INSTRUCTION MANUAL / MANUAL DE MONTAJE / MONTAGEANLEITUNG / MANUALE DI MONTAGGIO / MONTAGEHANDLEIDING / INSTRUKCJA MONTAŻU

Ext.

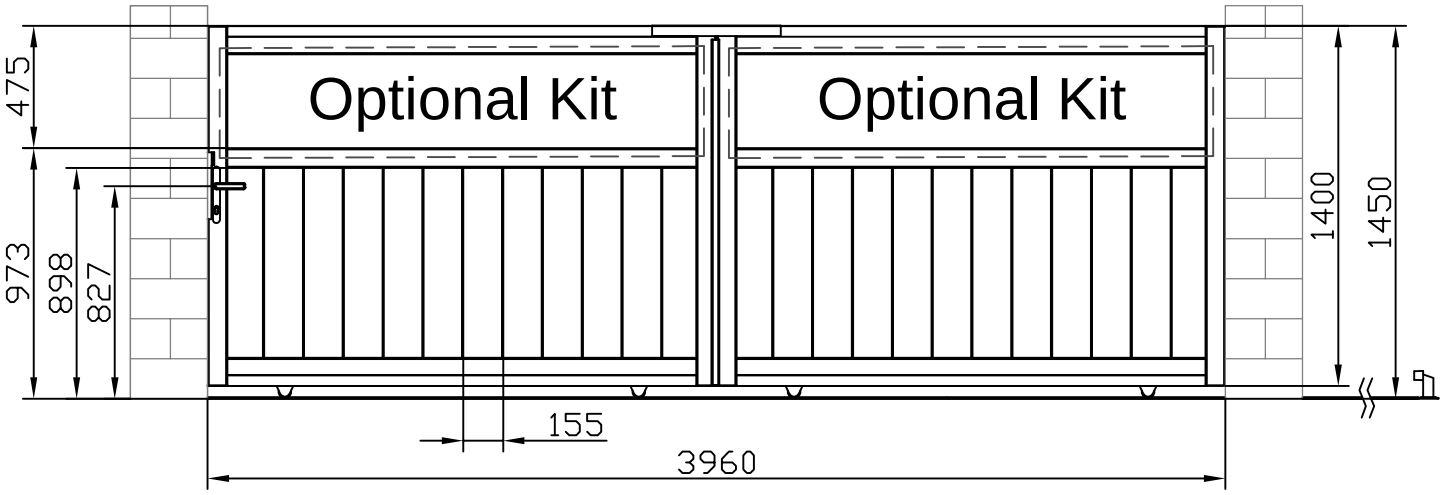
Optional Kit
Optional Kit
475
973
898
827
1400
1450
155
3960

Int.

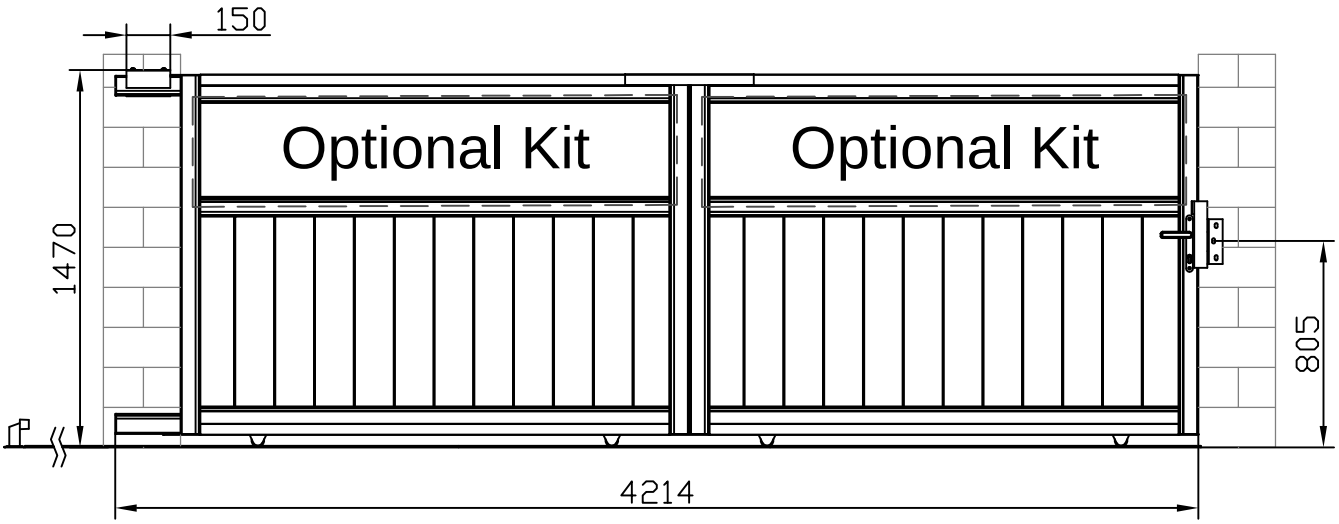
150
Optional Kit
Optional Kit
1470
805
4214

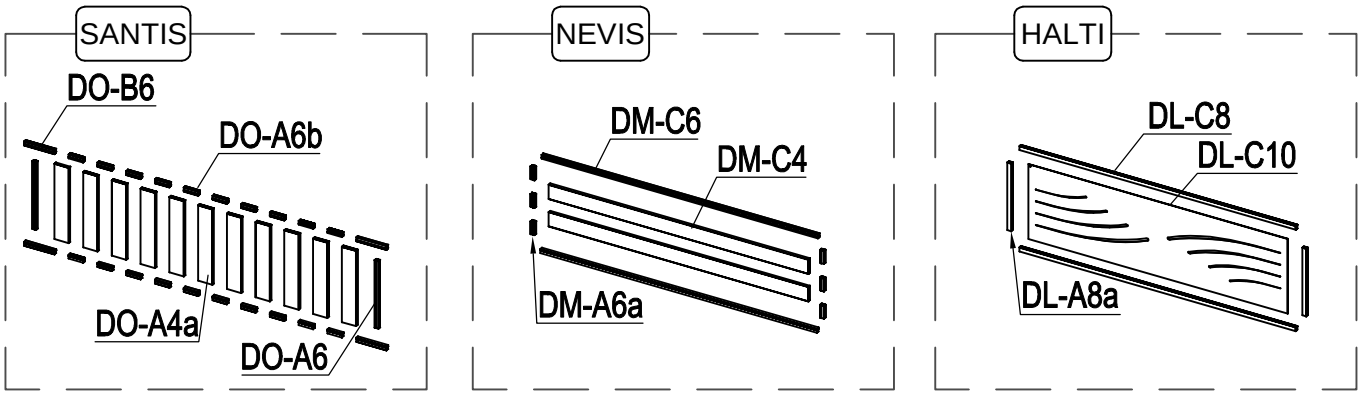
SANTIS
DO-B6
DO-A6b
DO-A4a
DO-A6
NEVIS
DM-C6
DM-C4
DM-A6a
HALTI
DL-C8
DL-C10
DL-A8a

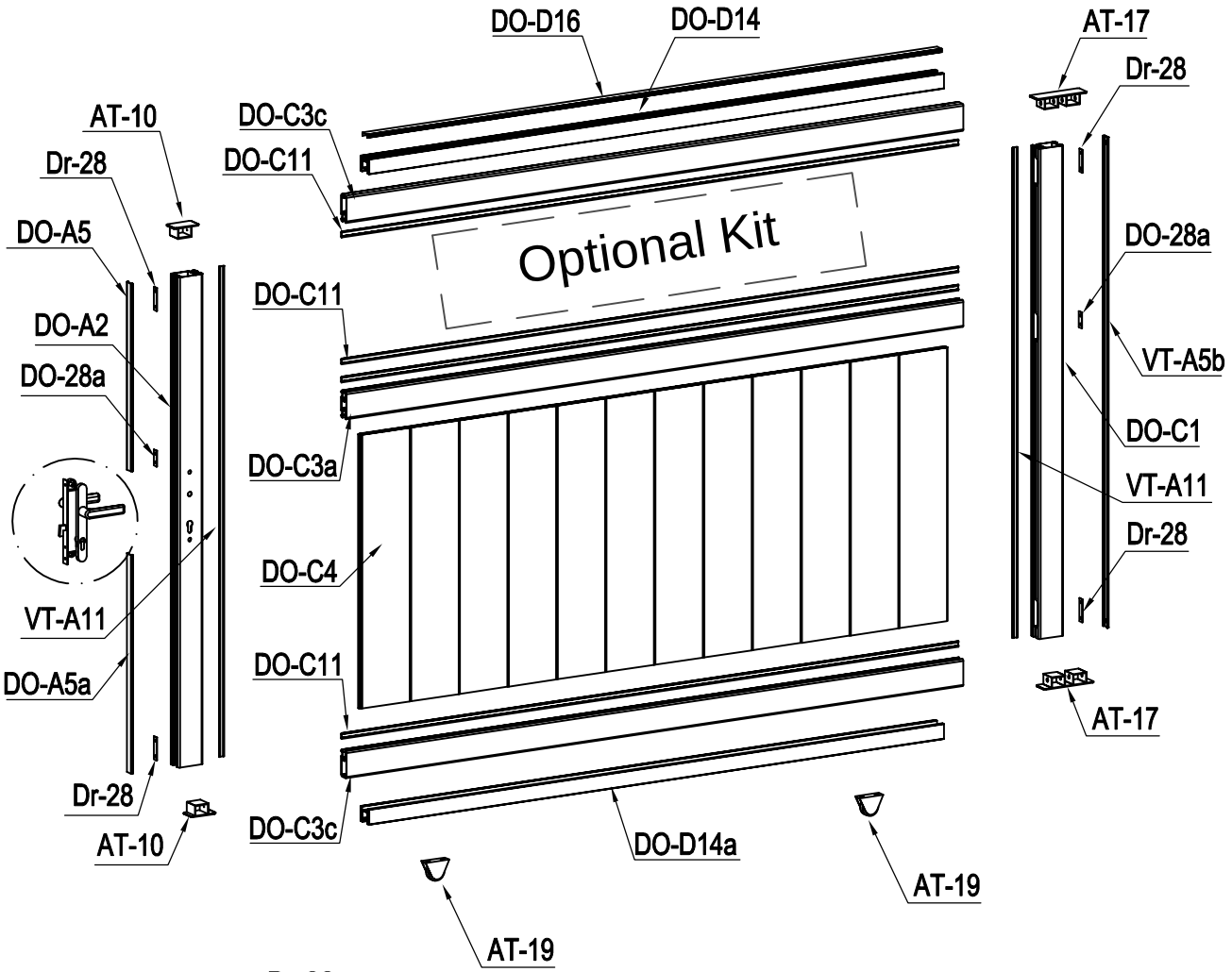
DO-D16
DO-D14
AT-17
Dr-28
AT-10
DO-C3c
DO-C11
Dr-28
DO-A5
Optional Kit
DO-28a
DO-C11
DO-A2
VT-A5b
DO-28a
DO-C1
DO-C3a
VT-A11
Dr-28
DO-C4
VT-A11
DO-C11
DO-A5a
AT-17
Dr-28
AT-10
DO-C3c
DO-D14a
AT-19
AT-19

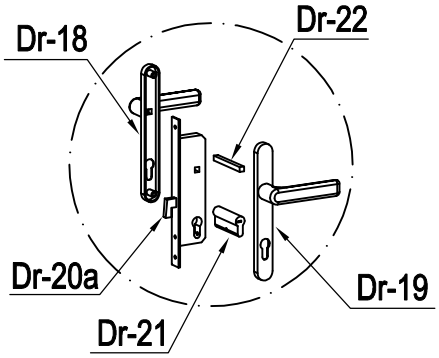
Dr-18
Dr-22
Dr-20a
Dr-19
Dr-21

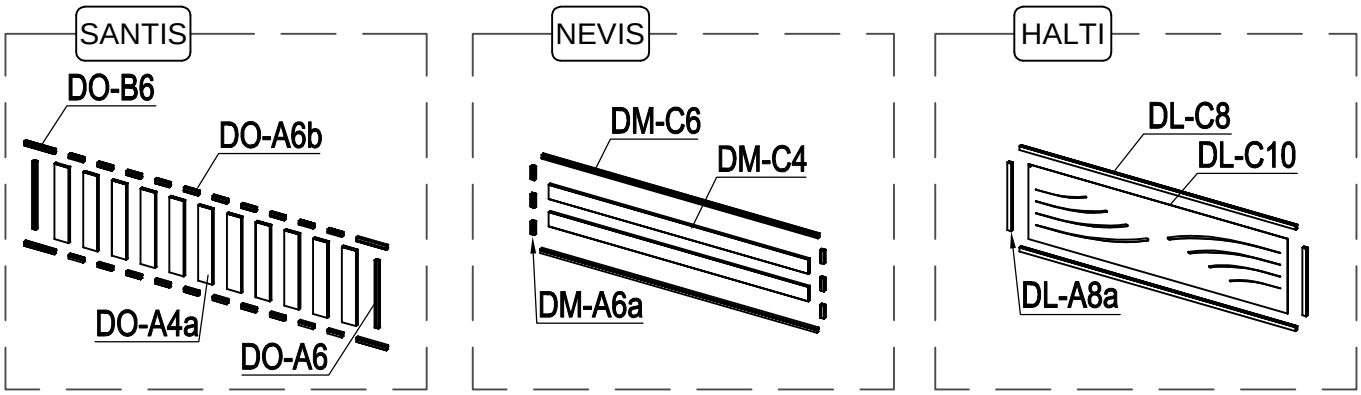
SANTIS
DO-B6
DO-A6b
DO-A4a
DO-A6
NEVIS
DM-C6
DM-C4
DM-A6a
HALTI
DL-C8
DL-C10
DL-A8a

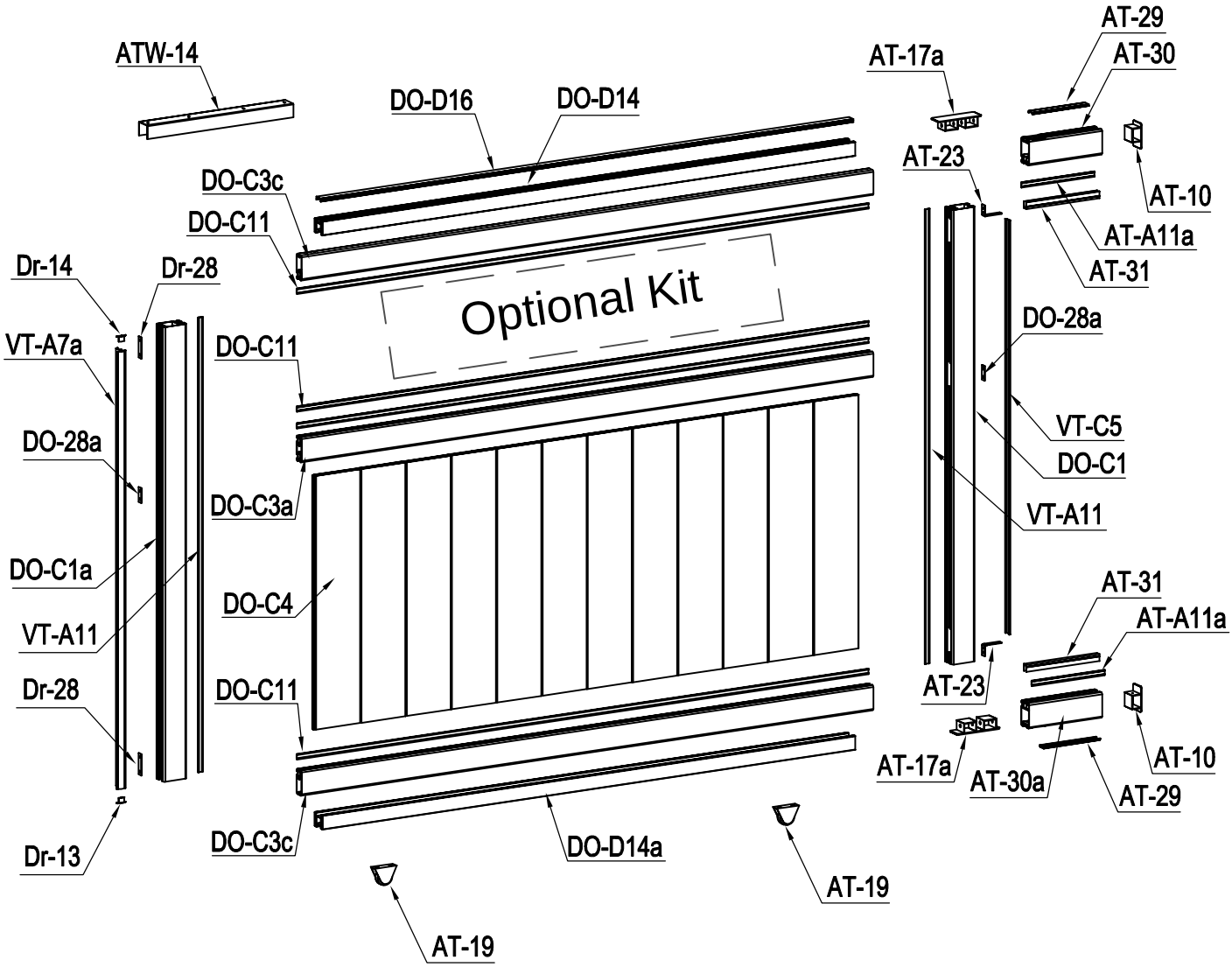
ATW-14
DO-D16
DO-D14
AT-17a
AT-29
AT-30
AT-23
AT-10
DO-C3c
DO-C11
AT-A11a
AT-31
Dr-14
Dr-28
Optional Kit
DO-28a
VT-A7a
DO-C11
VT-C5
DO-28a
DO-C1
DO-C3a
VT-A11
DO-C1a
AT-31
DO-C4
AT-A11a
VT-A11
Dr-28
DO-C11
AT-23
AT-17a
AT-10
AT-30a
AT-29
Dr-13
DO-C3c
DO-D14a
AT-19
AT-19

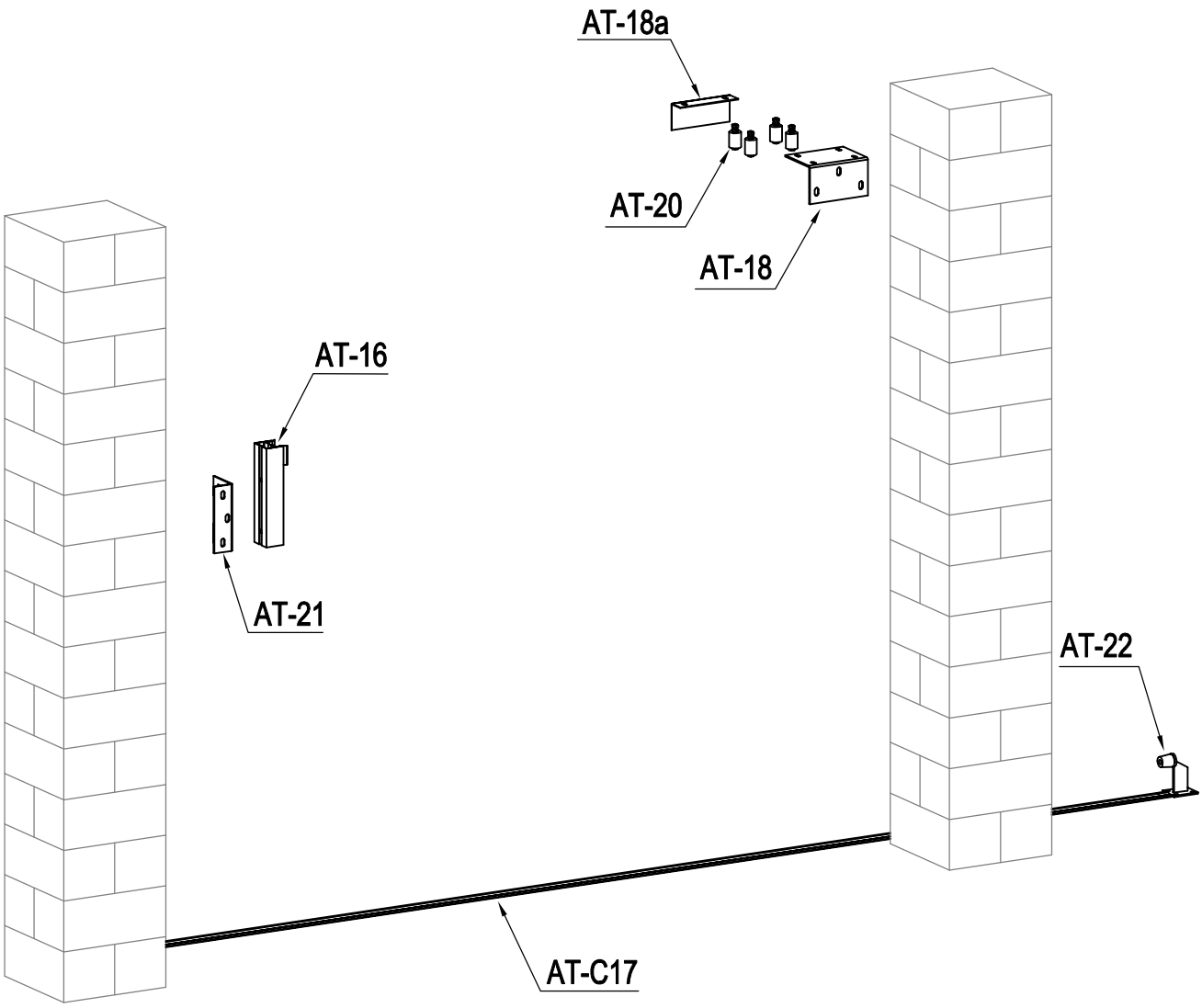
AT-18a
AT-20
AT-18
AT-16
AT-21
AT-22
AT-C17

PARTS LIST

IMAGE	NO.	L.(mm)	QTY
	DO-C1	1395	2
	DO-C1a	1395	1
	DO-A2	1395	1
	AT-30	250	1
	AT-30a	250	1
	DO-C3c	1957	4
	DO-C3a	1957	2
	DO-C4	779	24
	VT-A5b	1395	1
	VT-C5	1270	1
	DO-A5	532.5	1
	DO-A5a	622	1
	AT-29	193	2
	VT-A11	1395	4
	AT-A11a	250	2
	DO-C11	1957	8
	AT-31	250	2
	VT-A7a	1342	1
	DO-D14	1823	2
	DO-D14a	1823	2
	DO-D16	1822	2
	AT-16		1
	AT-C17	1580	5
	AT-17		2
	AT-17a		2
	AT-10		4
	Dr-13		1
	Dr-14		1
	DO-30		8
	AT-18		1

IMAGE	NO.	L.(mm)	QTY
	AT-18a		1
	ATW-14		1
	AT-19		4
	AT-20		4
	AT-21		1
	AT-22		1
	AT-23		2
	Dr-18		1
	Dr-19		1
	Dr-20a		1
	Dr-21		1
	Dr-22		1
	Dr-25		1
	Dr-25a		2
	Dr-27		2
	Dr-28		6
	DO-28a		4
	AT-22J		7
	DO-H30		4
	DO-H31		40
	DO-H32		24
	DO-H33		10
	DO-H34		50
	DO-H35		54
	DO-H36		2
	DO-H37		8
	DO-H38		4

PARTS LIST (Optional Kit)

Com-000352

IMAGE	NO.	L.(mm)	QTY
	DO-A4a	406	22
	DO-A6	364	4
	DO-B6	163	8
	DO-A6b	77.5	40
	DO-35		44

Com-000355

IMAGE	NO.	L.(mm)	QTY
	DM-C4	1865	4
	DM-C6	1955	4
	DM-A6a	69	12
	DO-32		8

Com-000358

IMAGE	NO.	L.(mm)	QTY
	DL-C8	1955	4
	DL-A8a	364	4
	DL-C10	1862	2
	DO-32		8
	DO-35		24

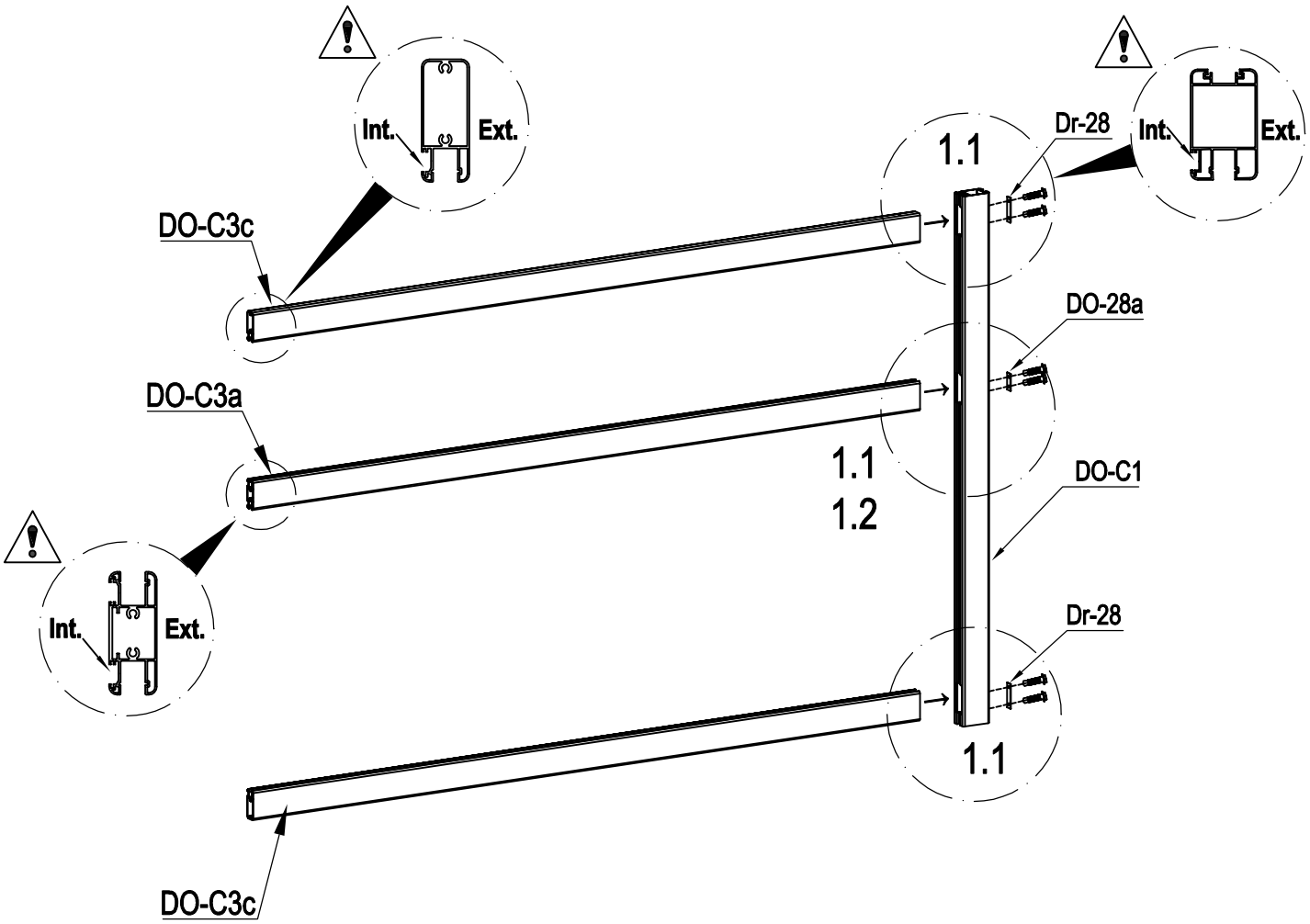

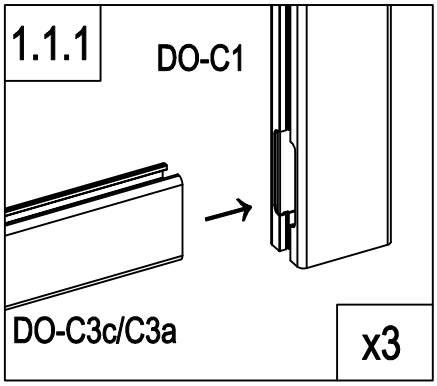

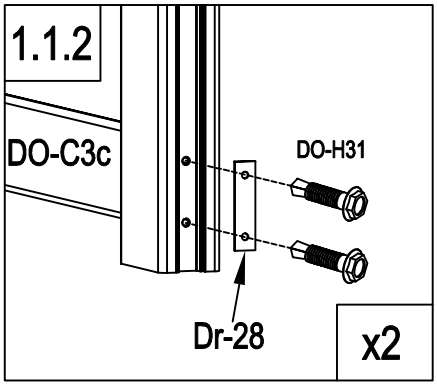

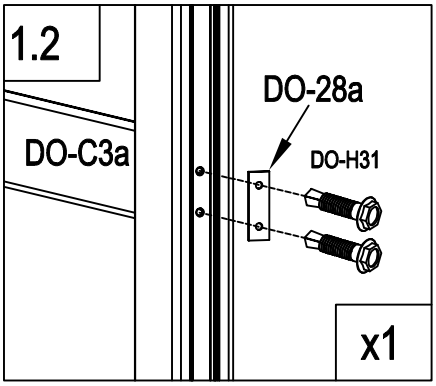

	DO-C1	1
	DO-C3c	2
	DO-C3a	1

	Dr-28	2
	DO-28a	1
	DO-H31	6

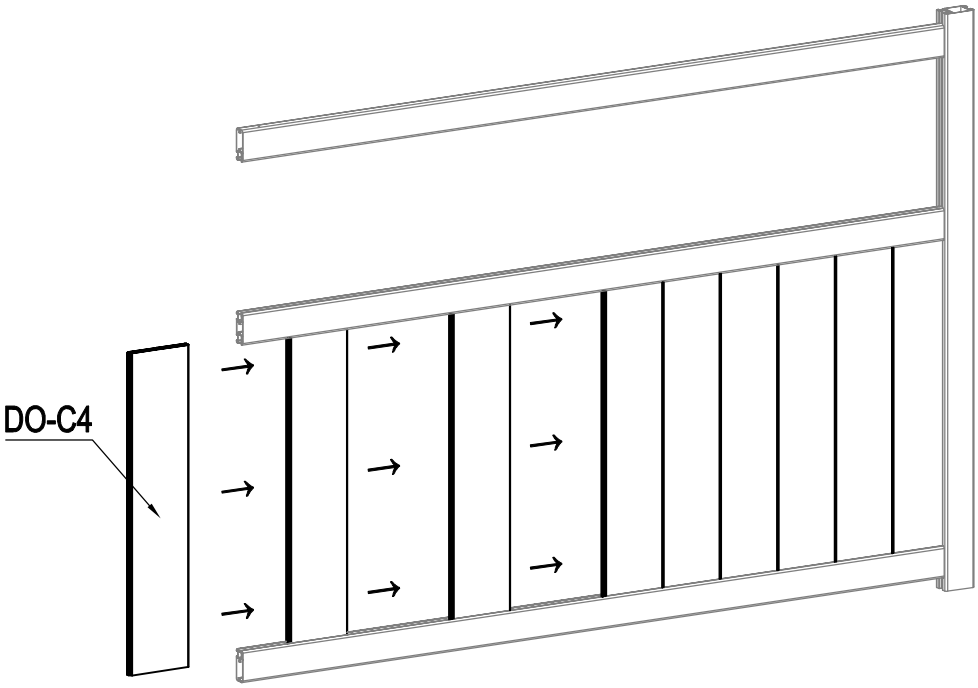

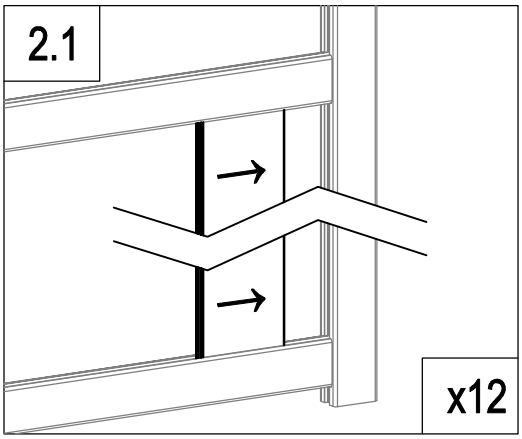

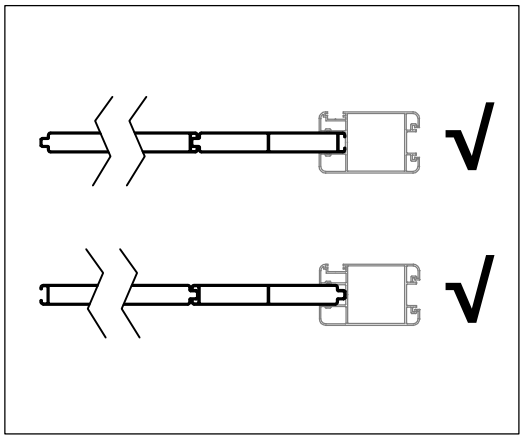

	DO-C4	12

Optional Kit →

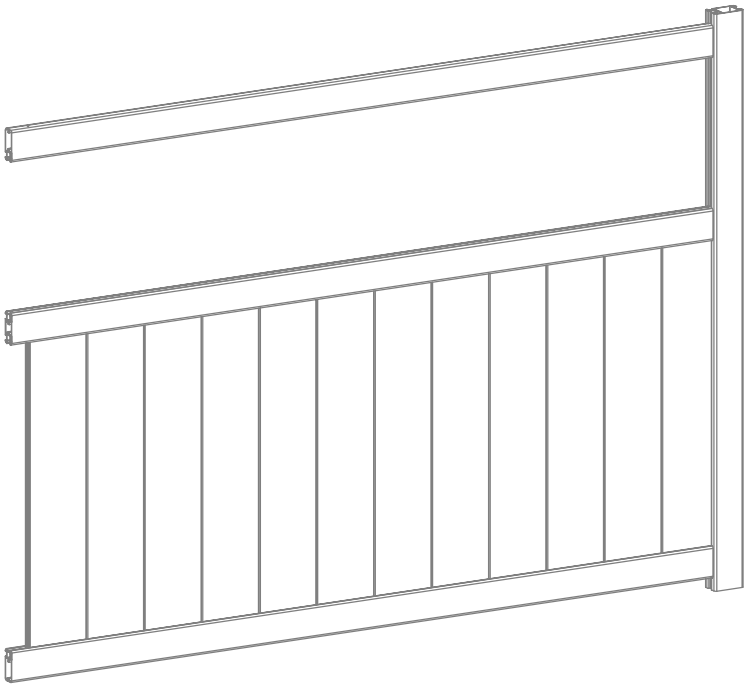

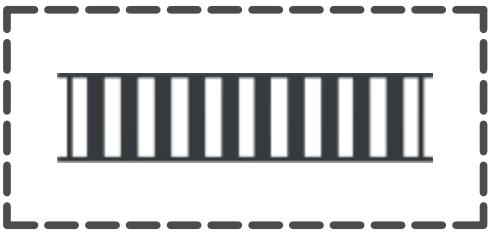

P 4~7

P 8~11

P 12~14

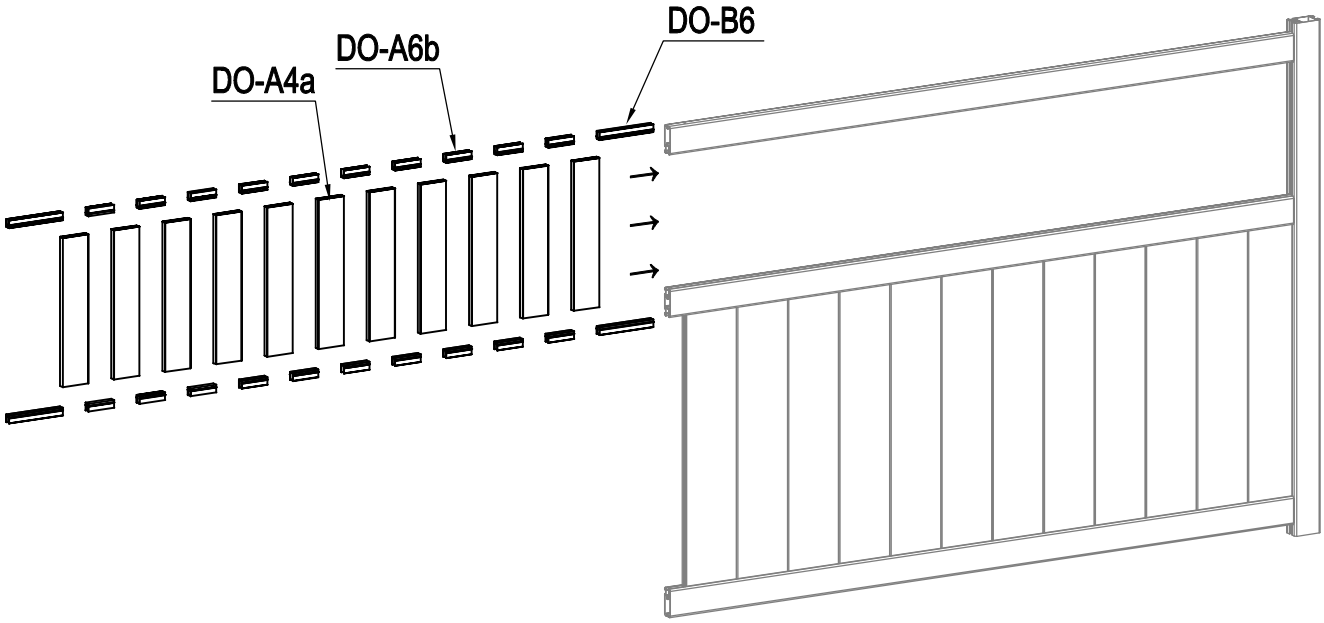

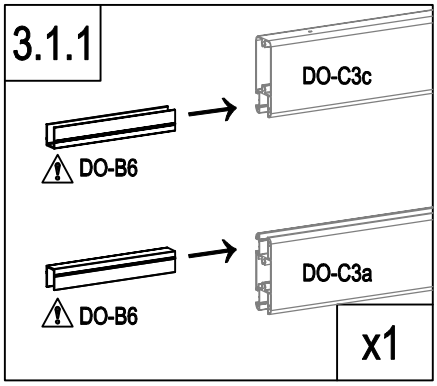

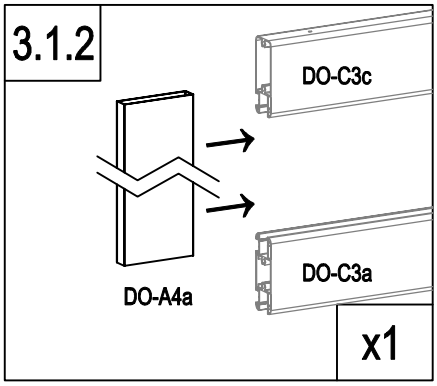

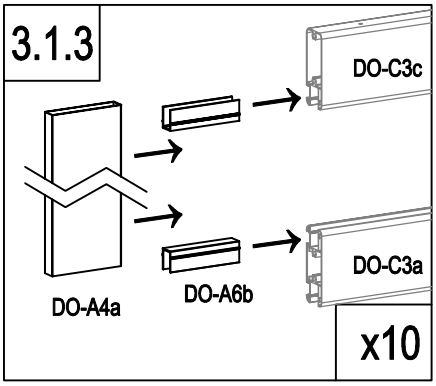

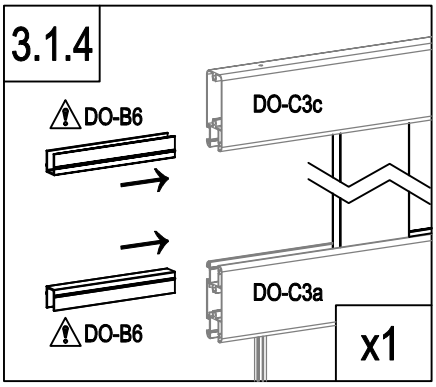

	DO-A4a	406mm	11
	DO-B6	163mm	4
	DO-A6b	77.5mm	20

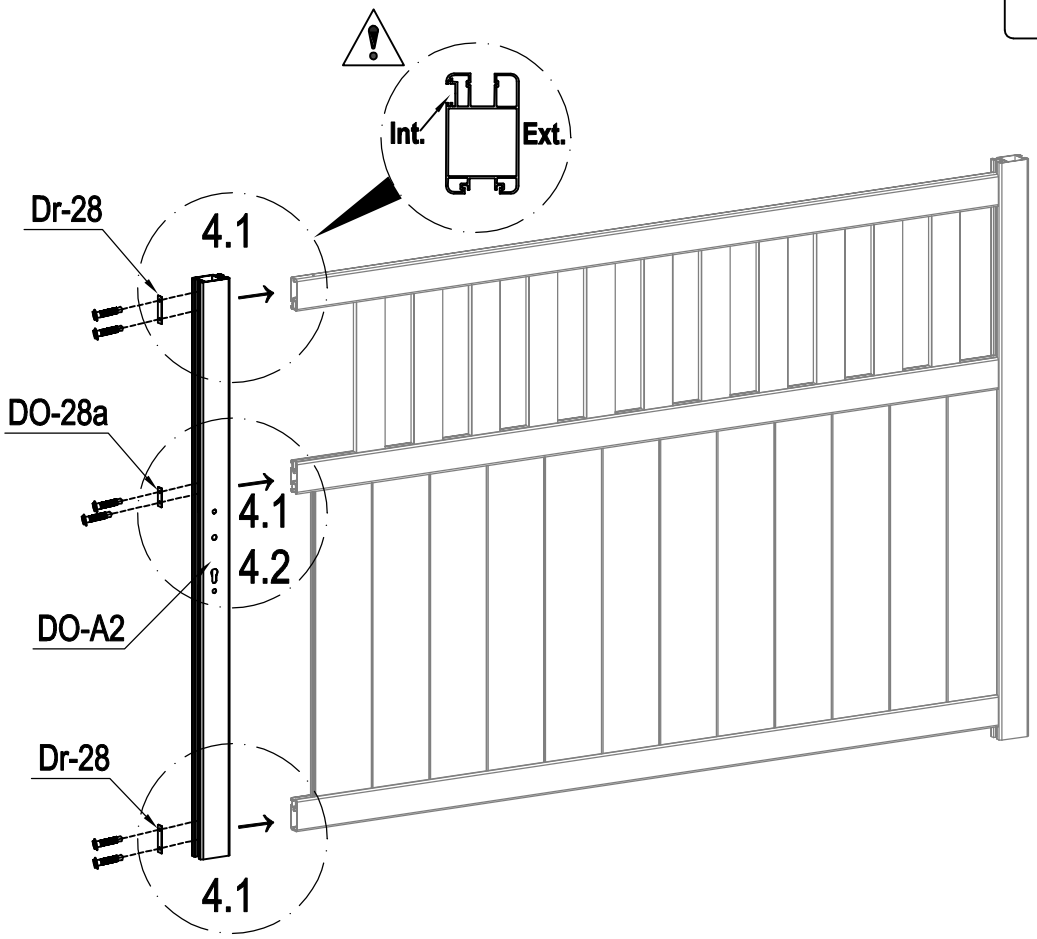

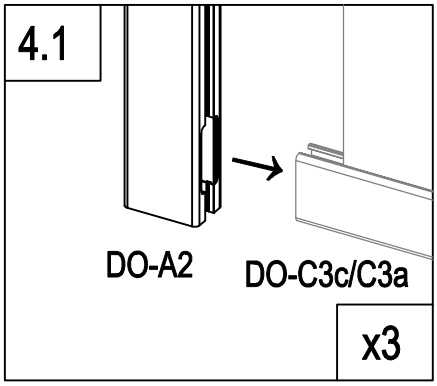

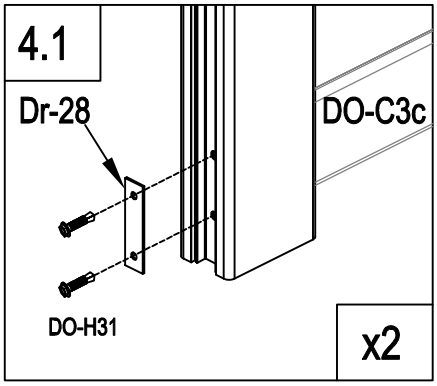

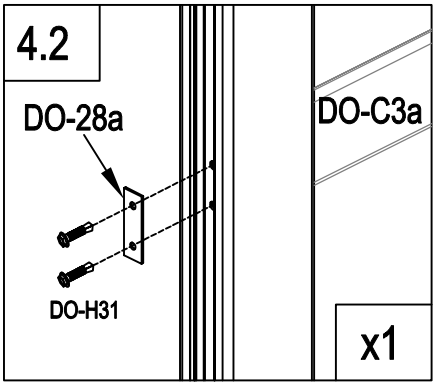

	DO-A2	1
	Dr-28	2
	DO-28a	1
	DO-H31	6

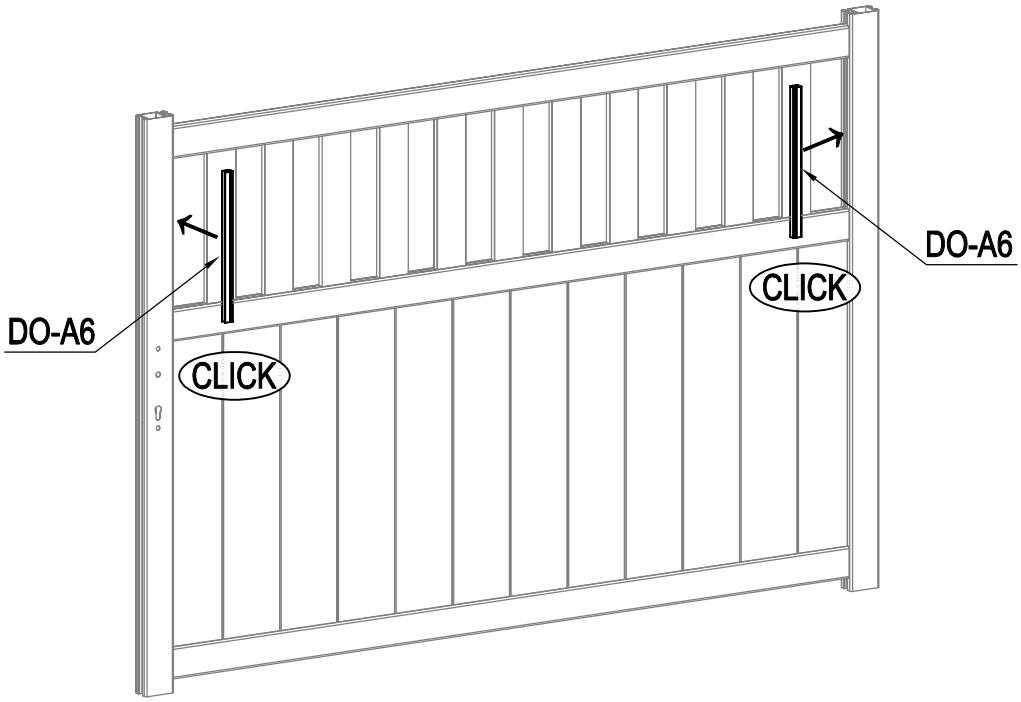

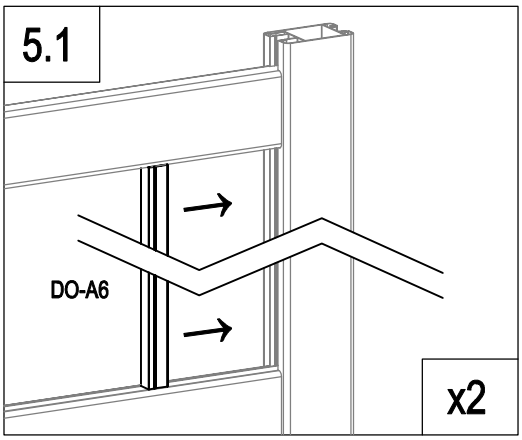

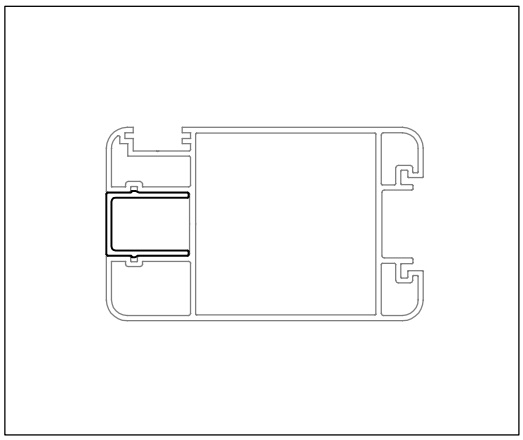

	DO-A6	2

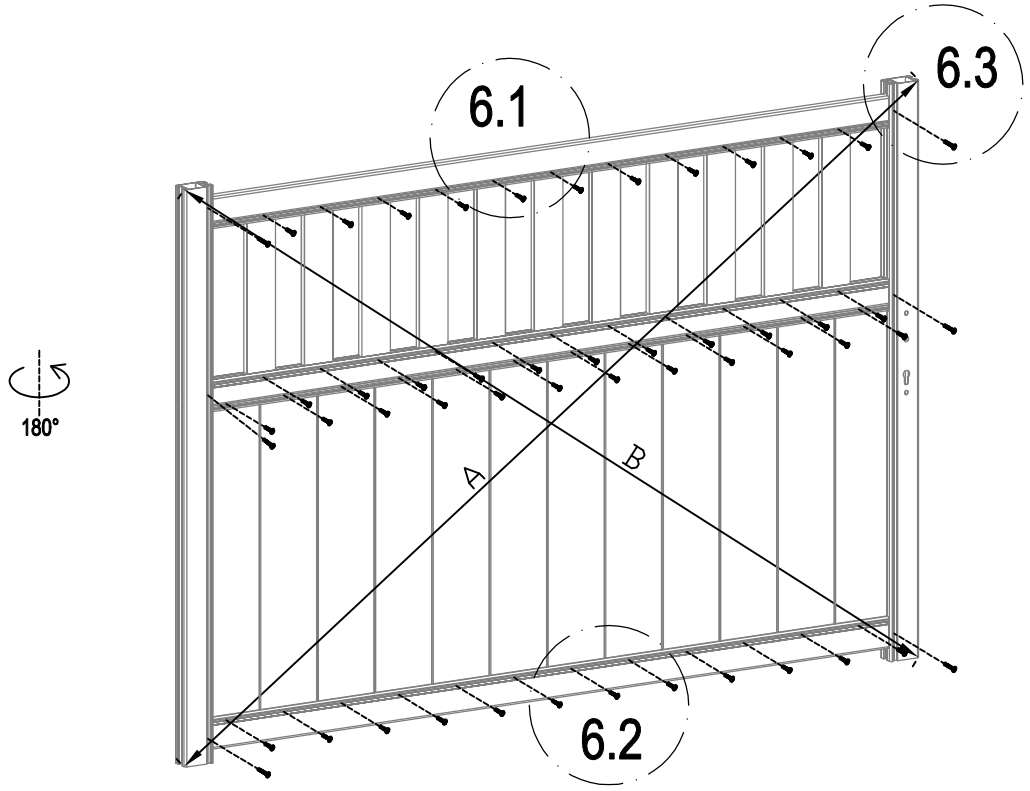

⚠ A=B

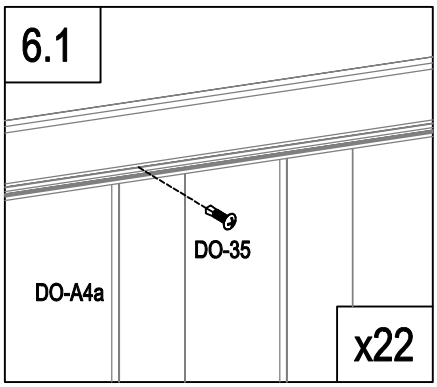

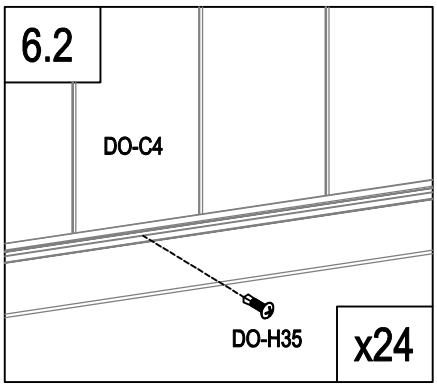

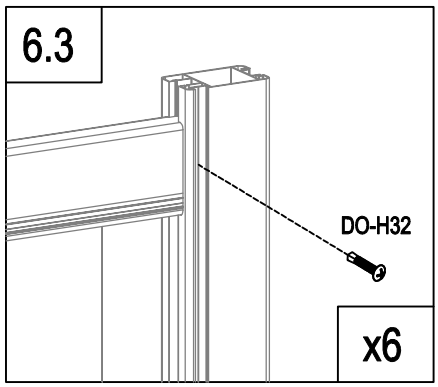

	DO-35	22
	DO-H35	24
	DO-H32	6

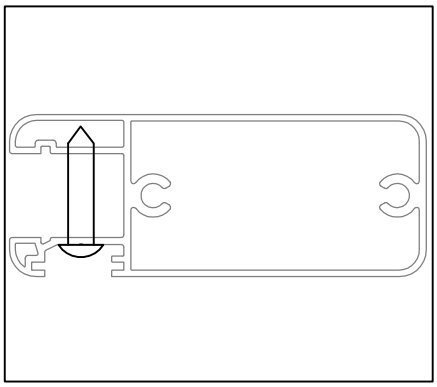

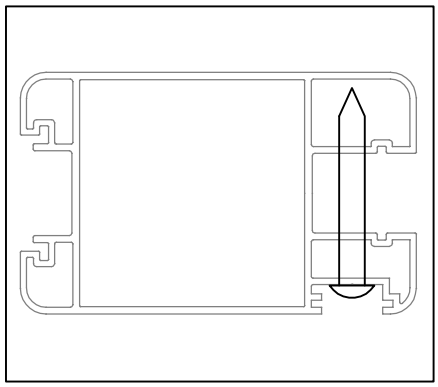

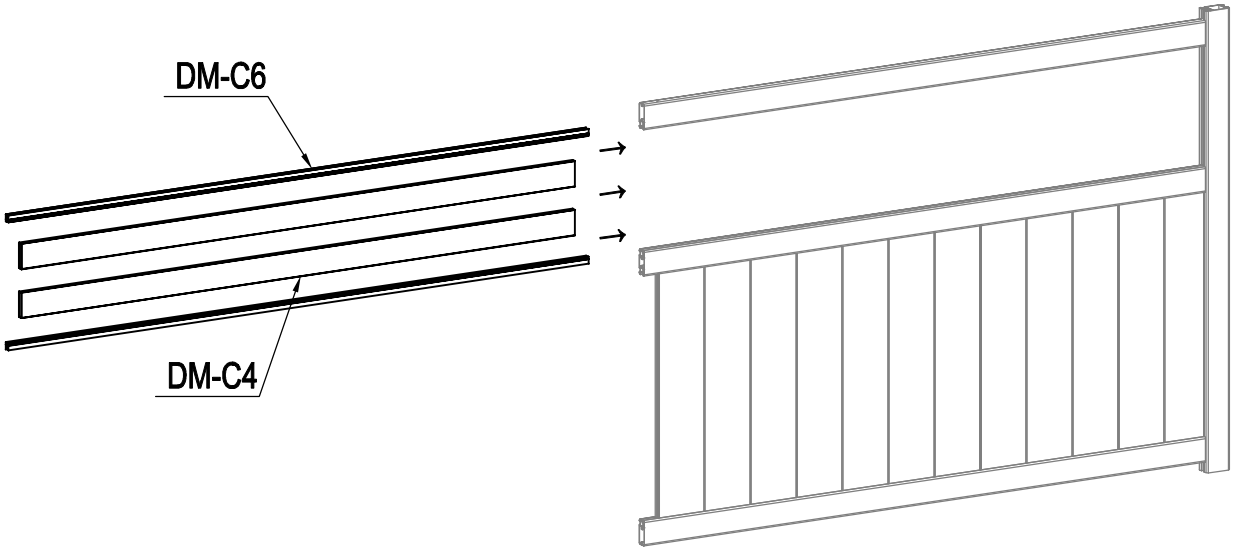

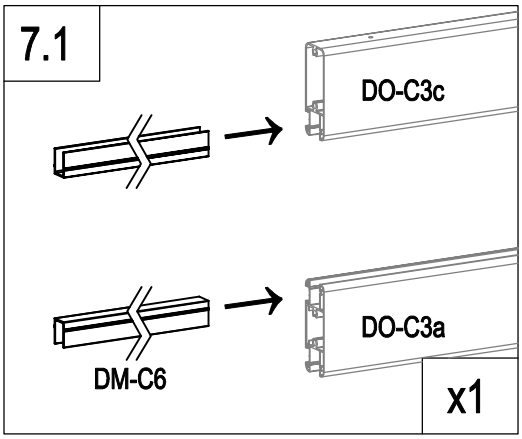

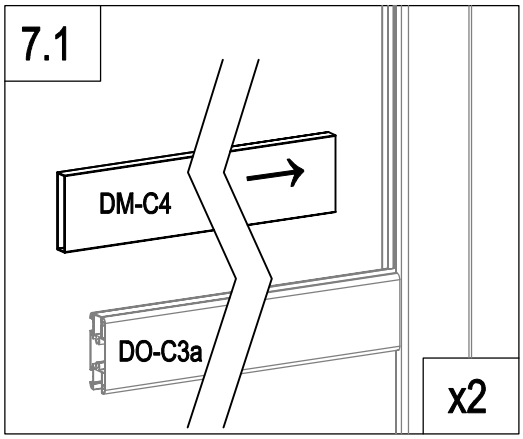

	DM-C4	2
	DM-C6	2

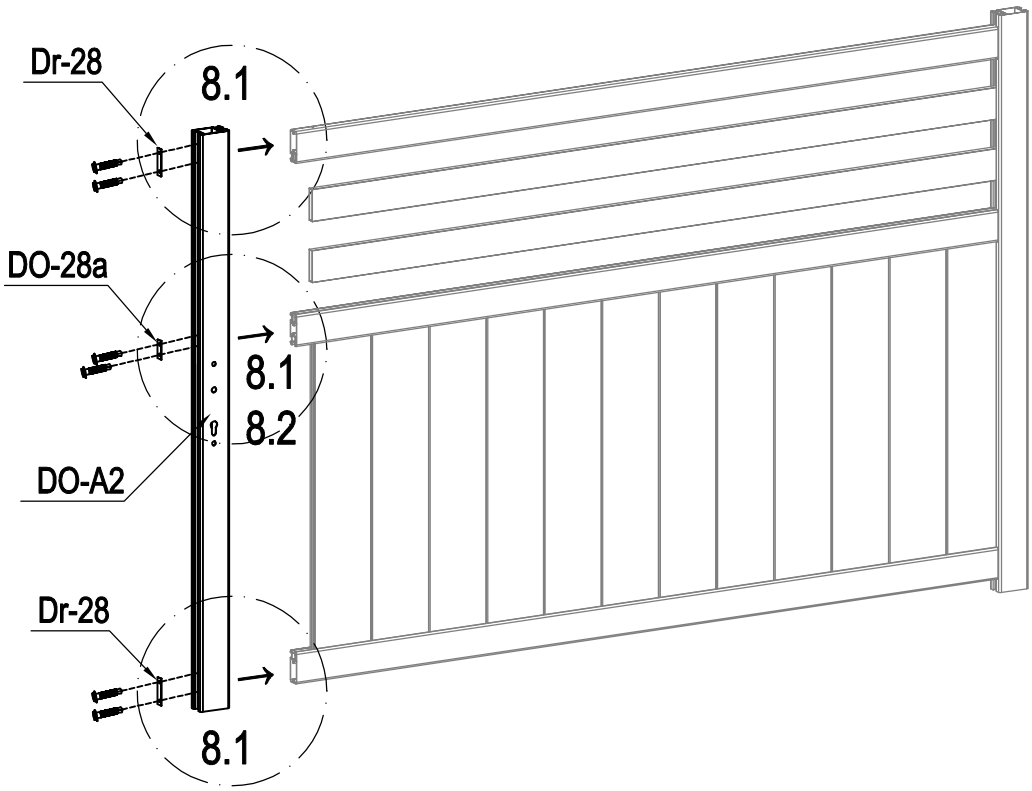

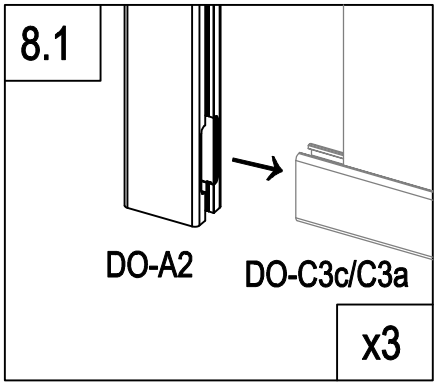

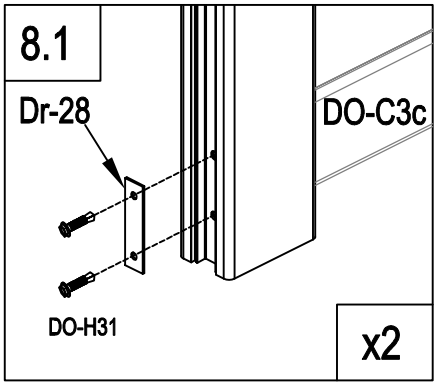

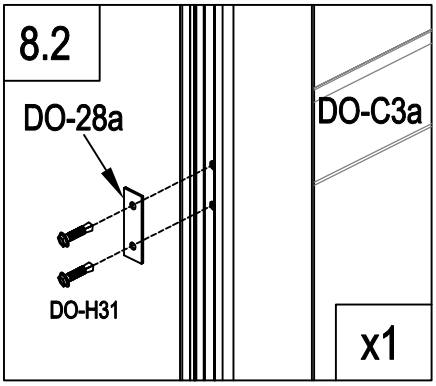

	DO-A2	1
	Dr-28	2
	DO-28a	1
	DO-H31	6

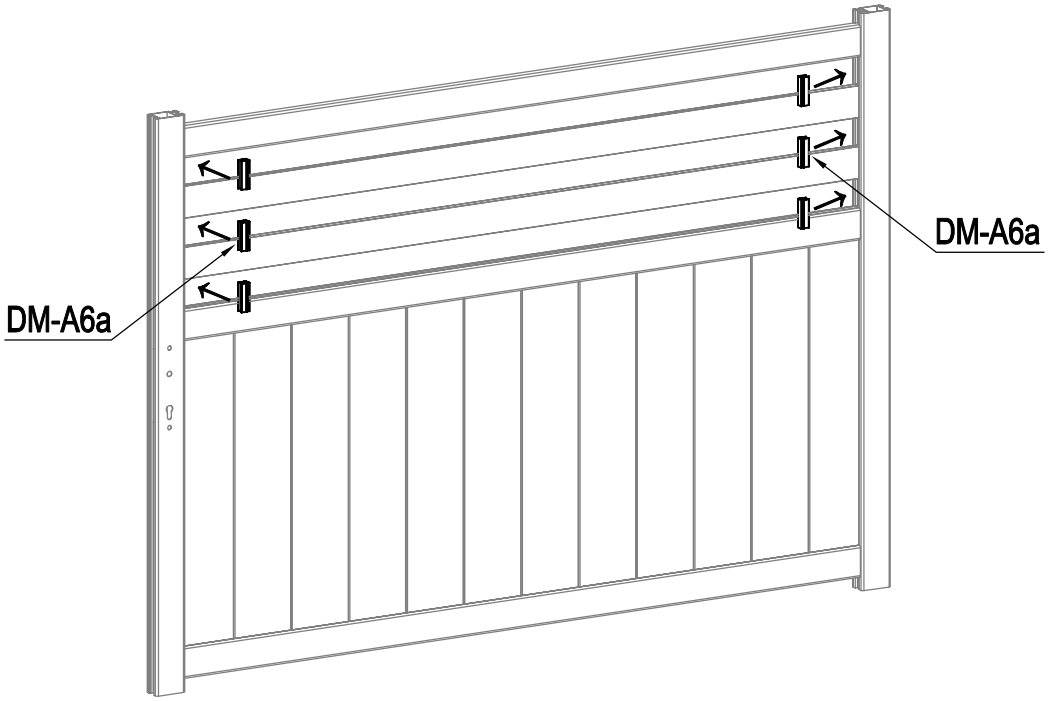

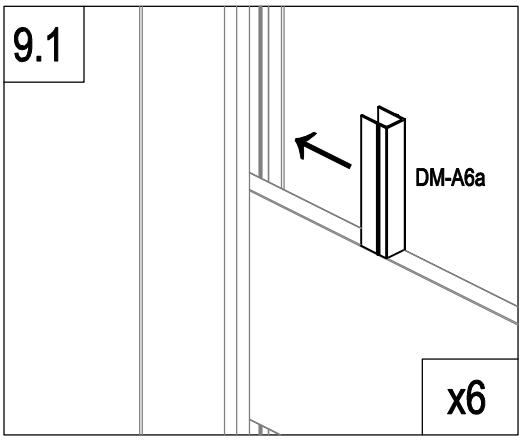

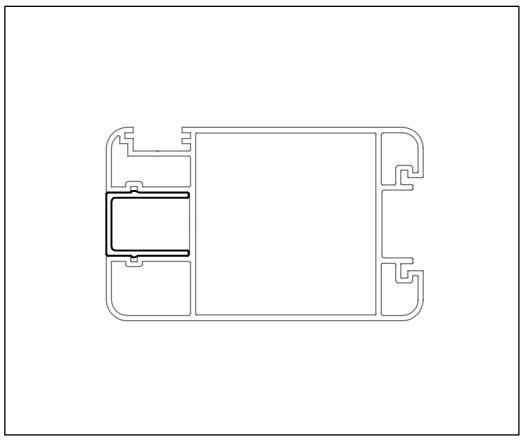

	DM-A6a	6

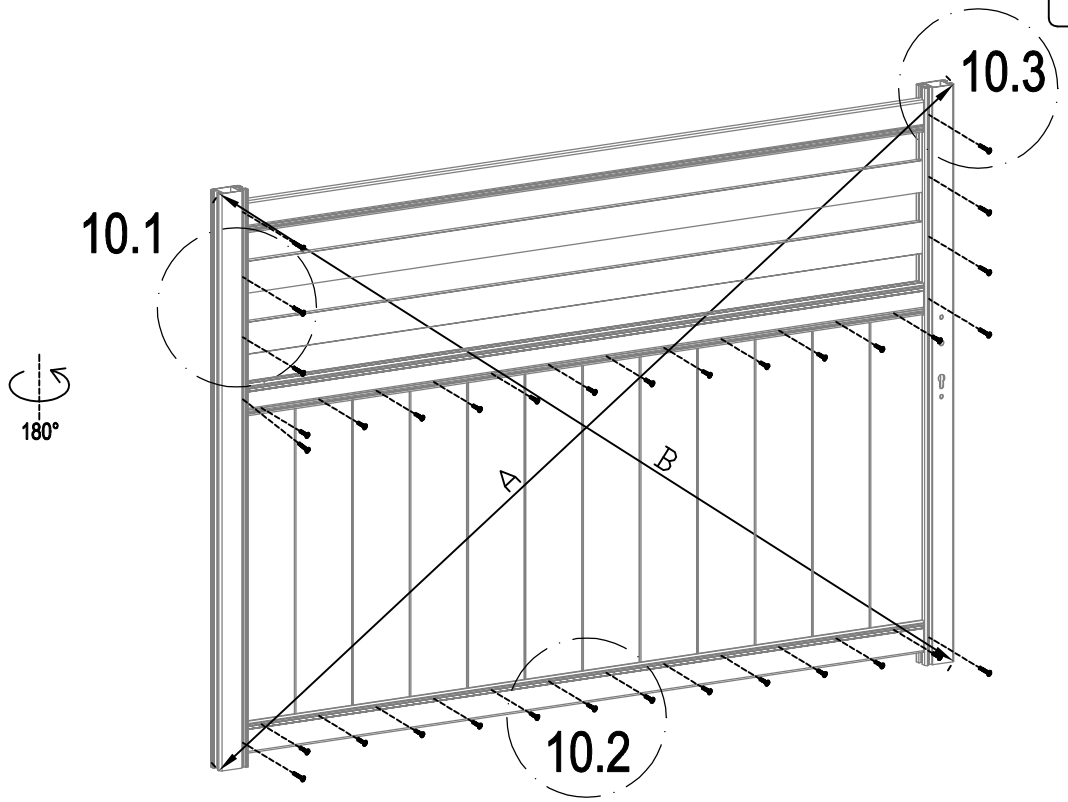

A=B

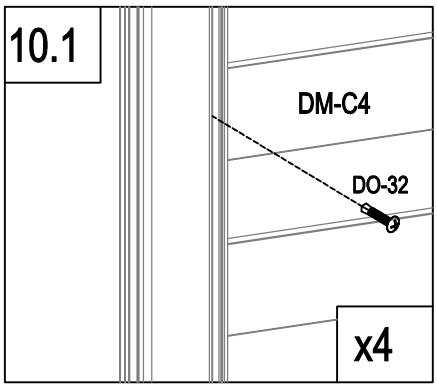

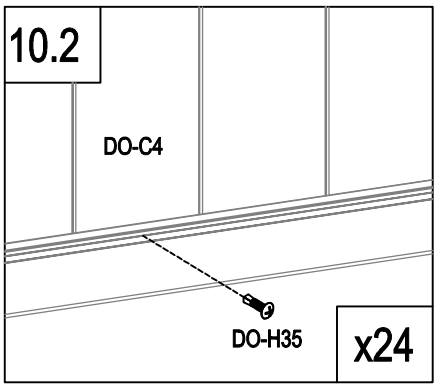

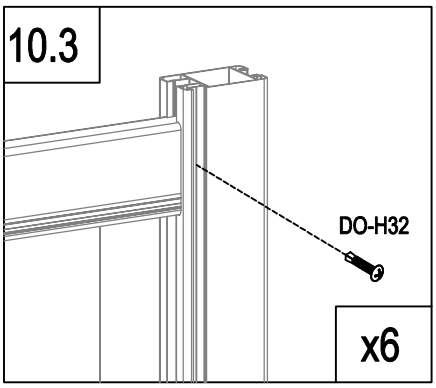

	DO-32	4
	DO-H35	24
	DO-H32	6

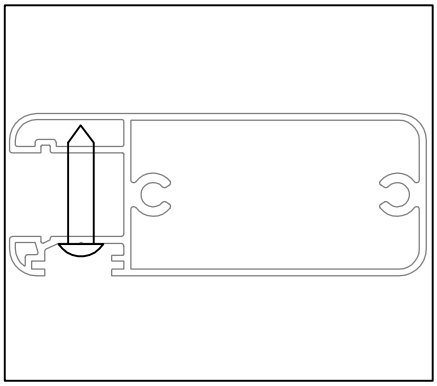

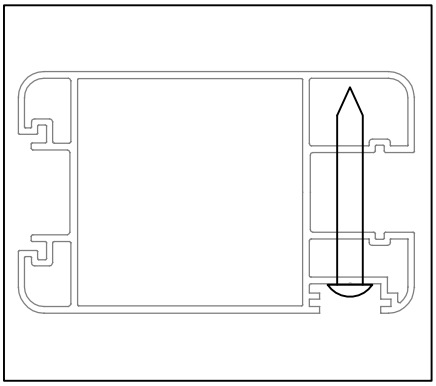

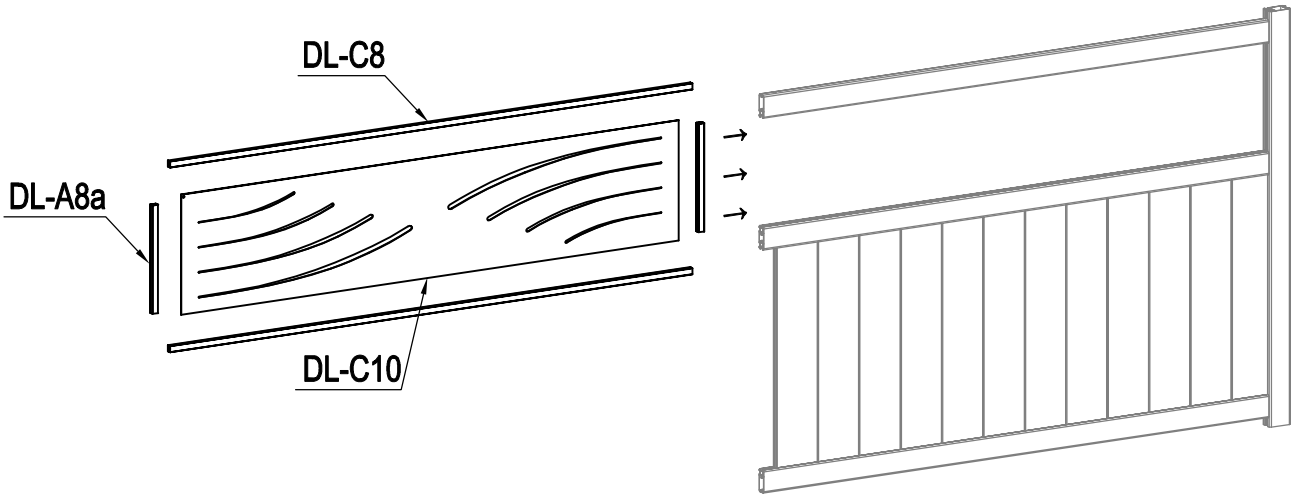

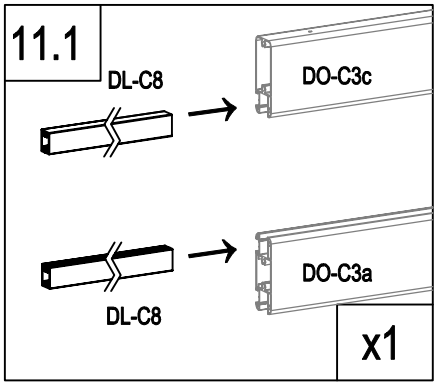

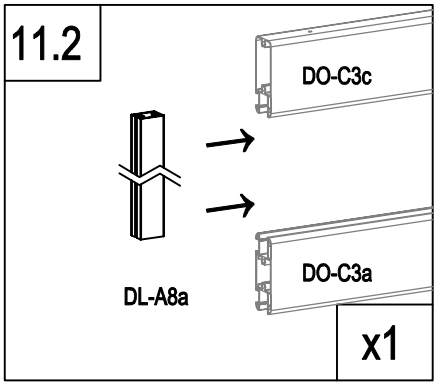

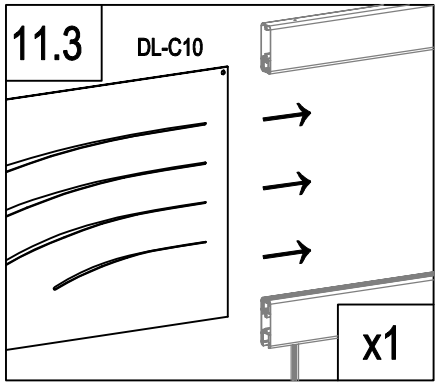

	DL-C10	1
	DL-C8	2
	DL-A8a	2

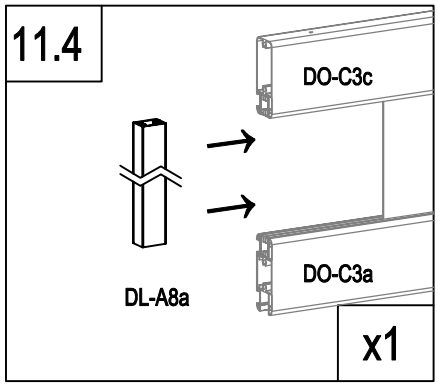

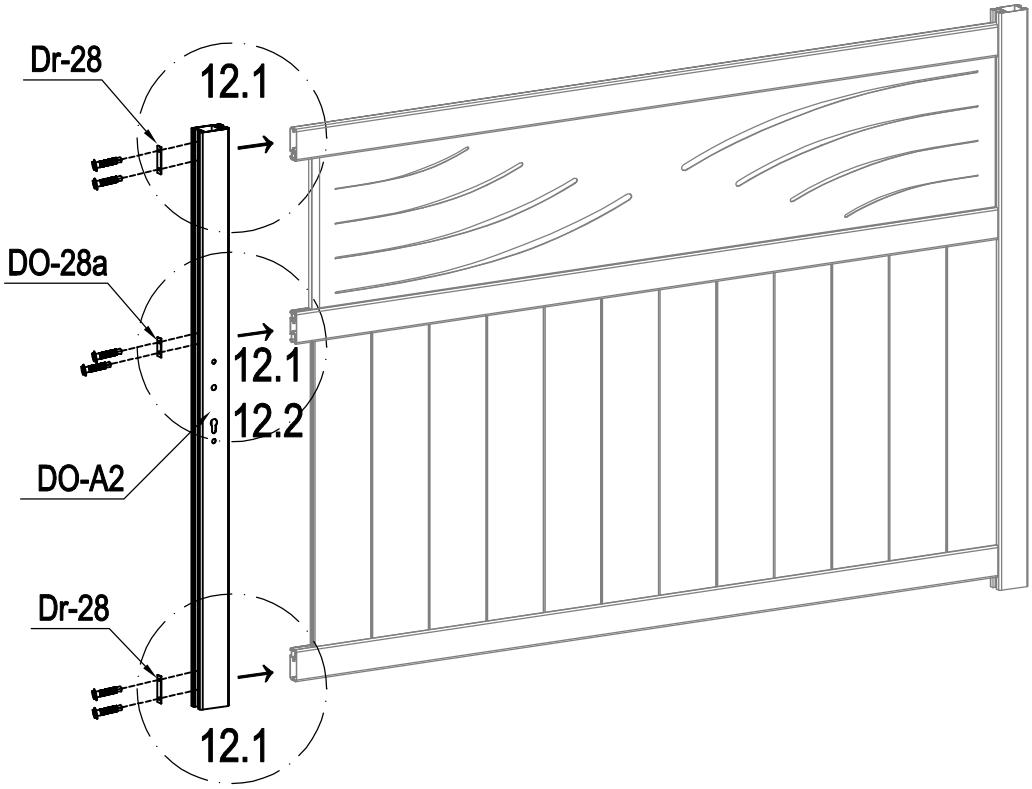

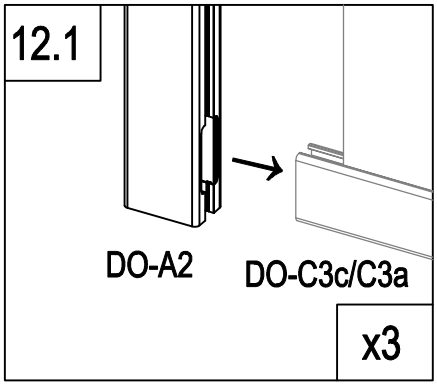

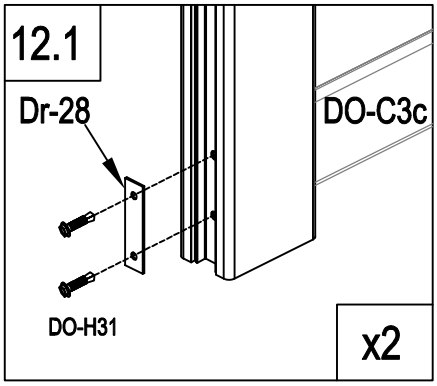

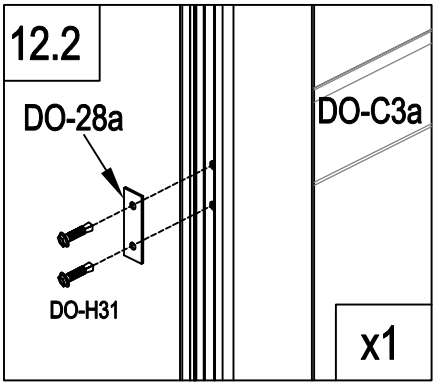

	DO-A2	1
	Dr-28	2
	DO-28a	1
	DO-H31	6

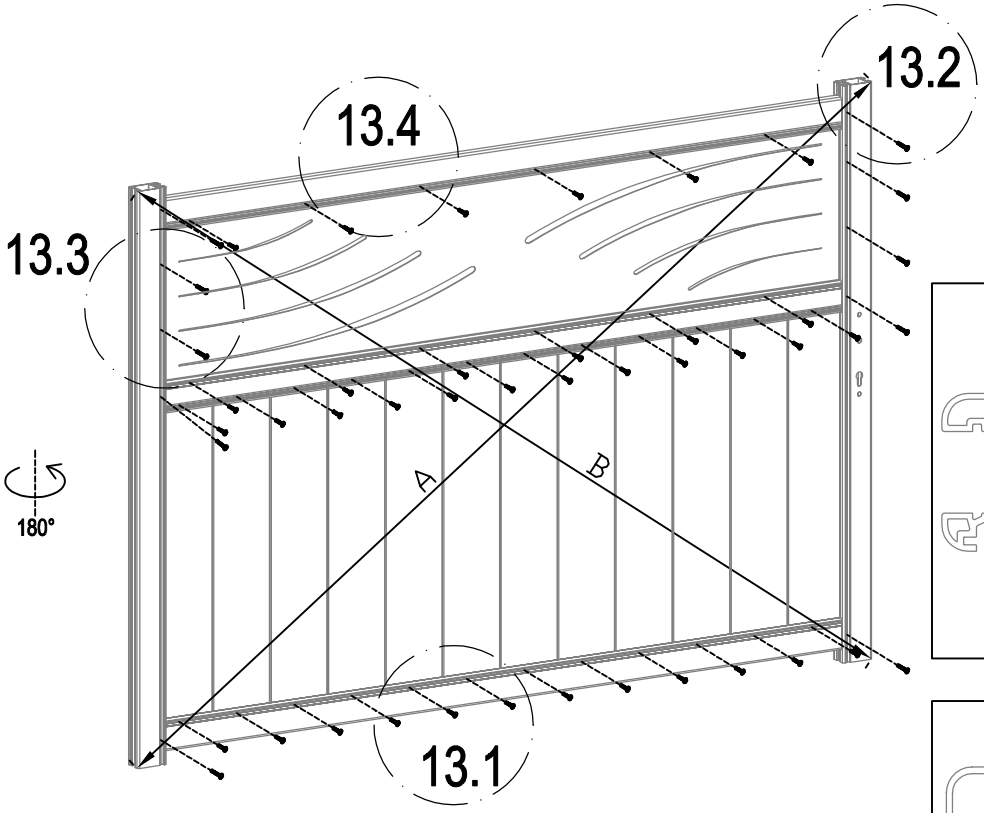

A=B

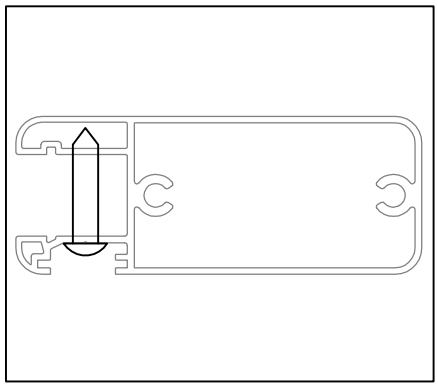

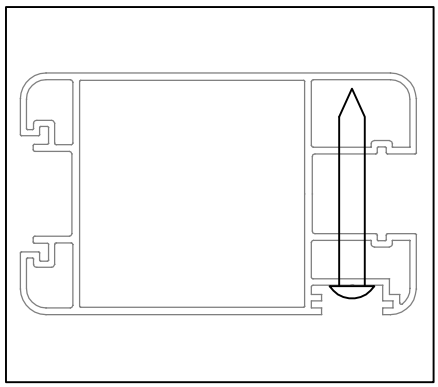

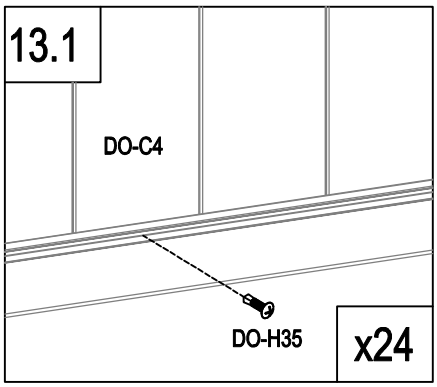

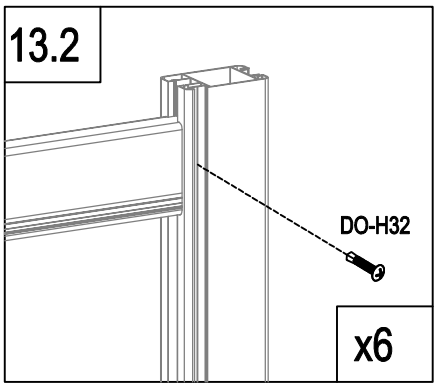

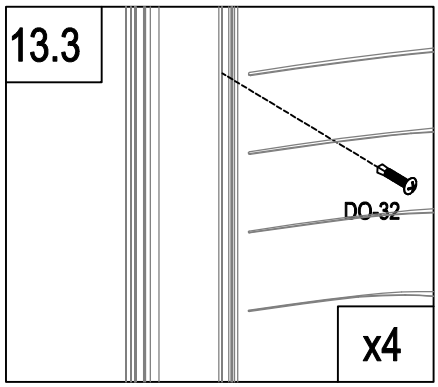

	DO-32	4
	DO-35	12
	DO-H35	24
	DO-H32	6

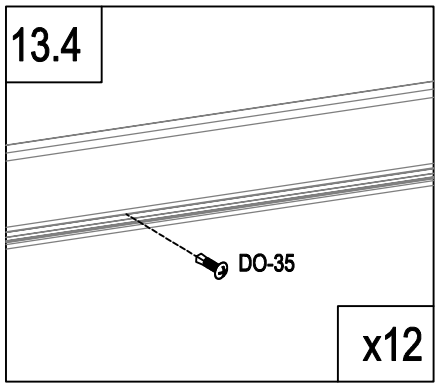

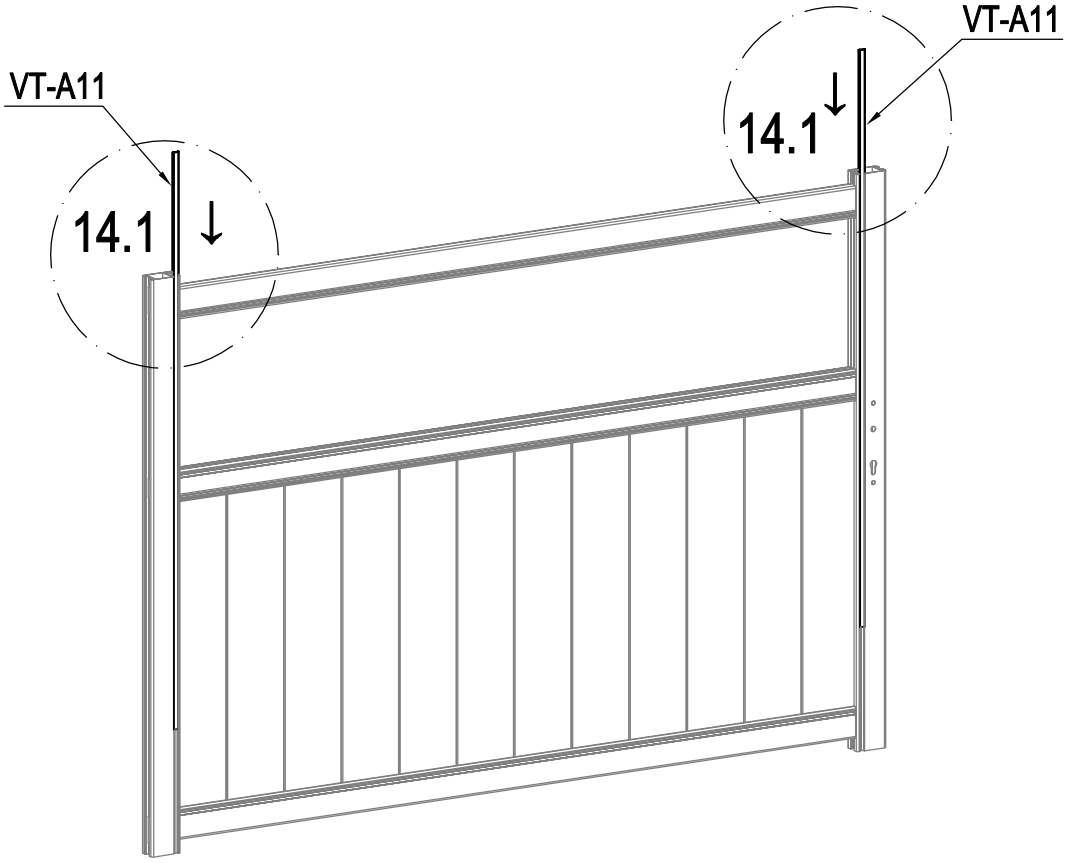

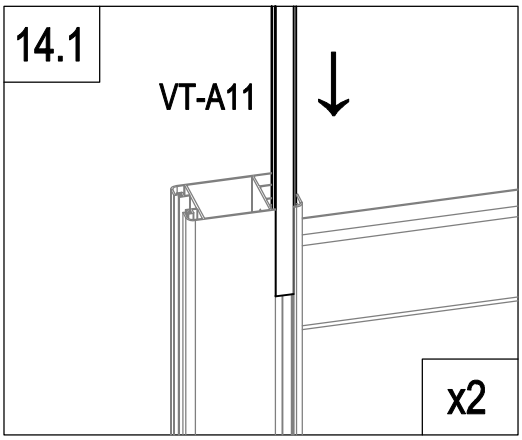

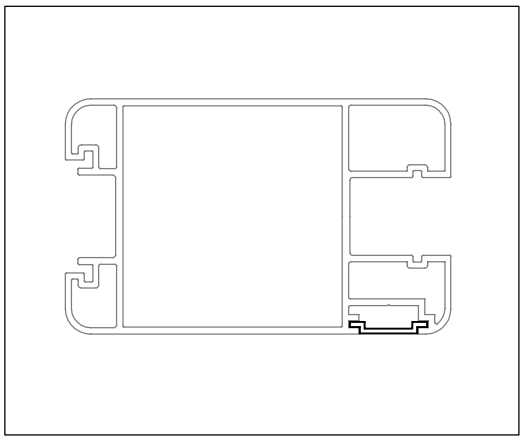

	VT-A11	2

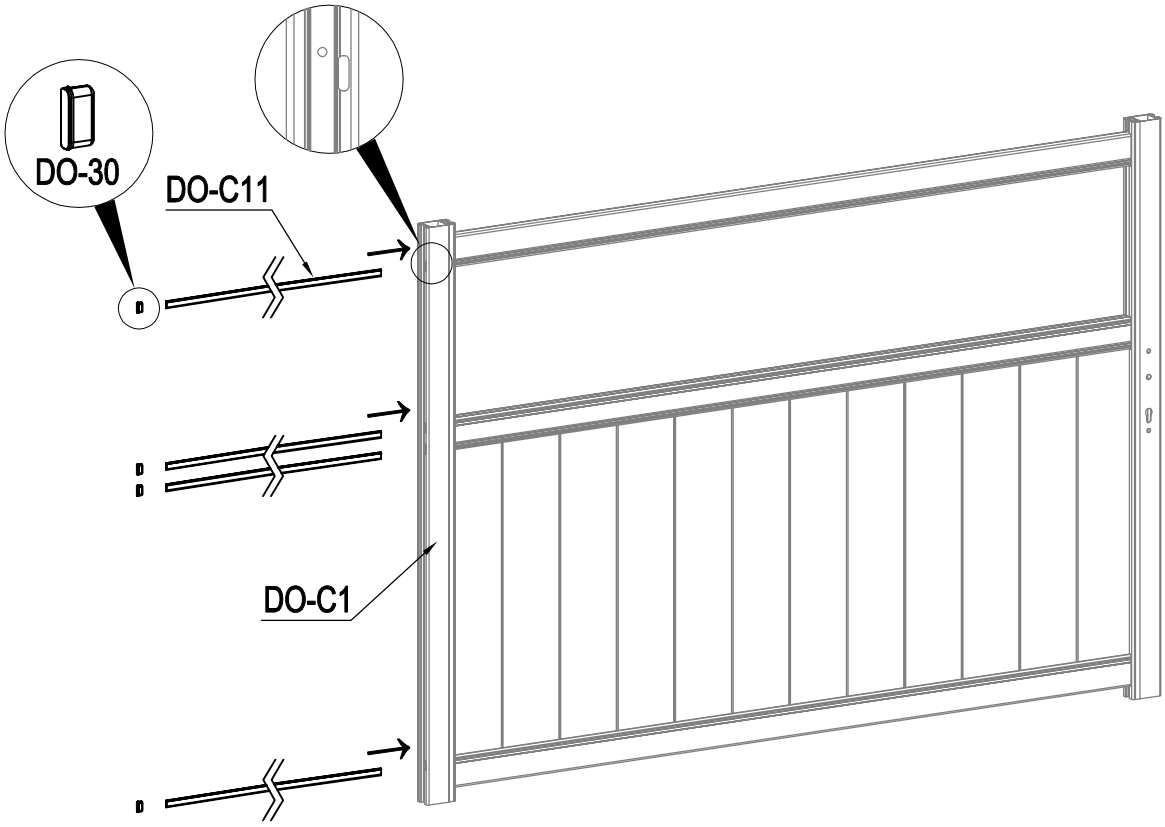

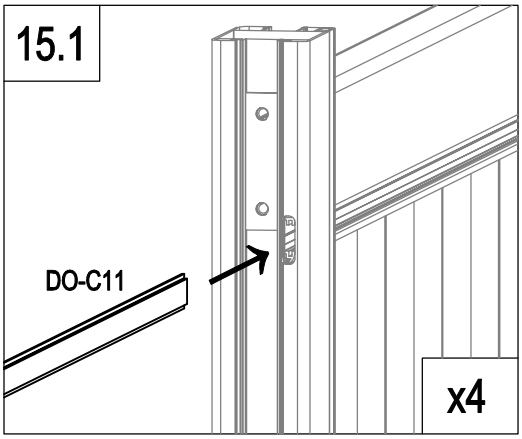

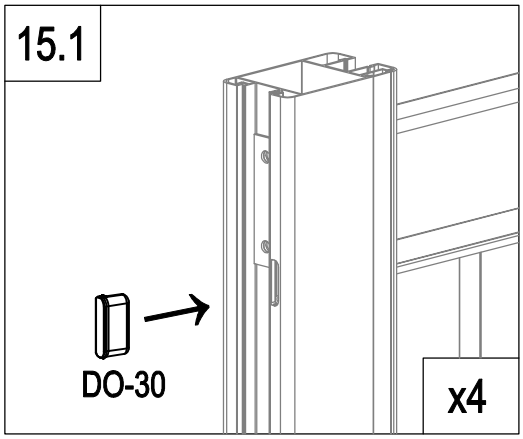

	DO-C11	4
	DO-30	4

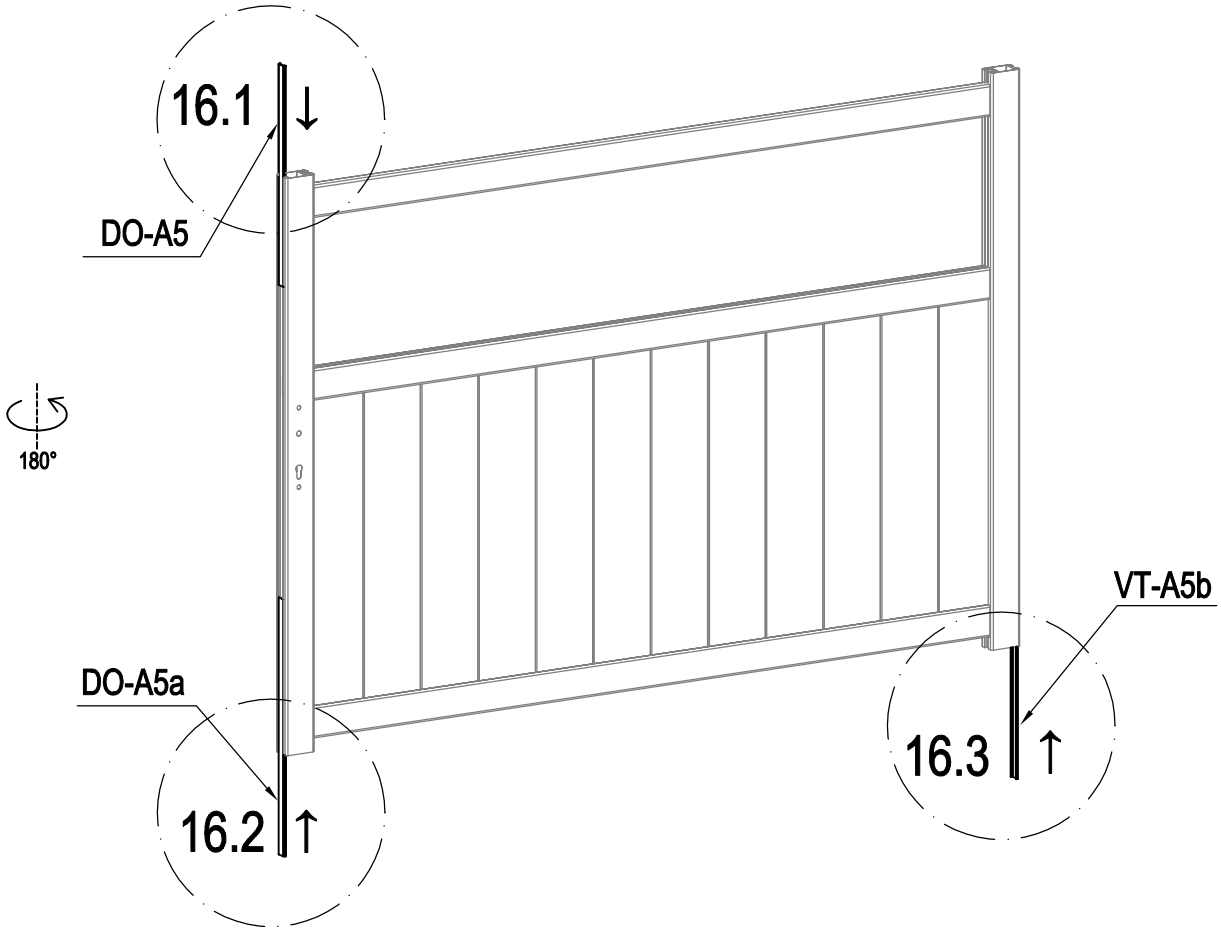

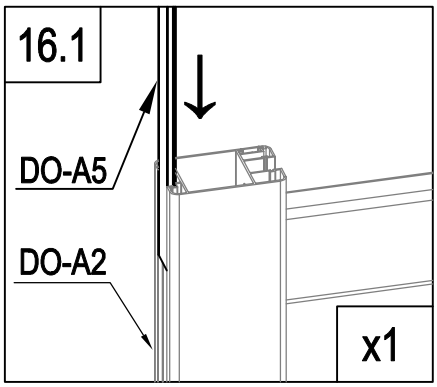

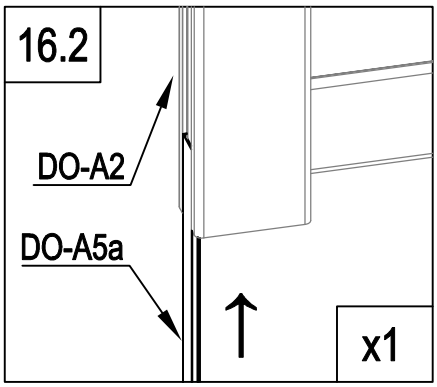

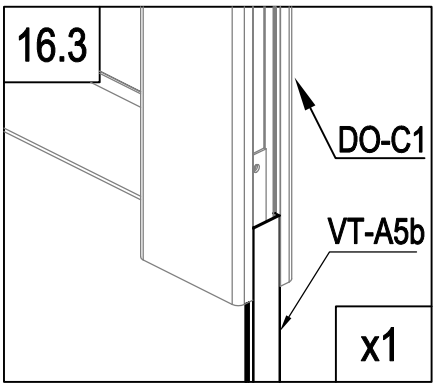

	VT-A5b	1
	DO-A5	1
	DO-A5a	1

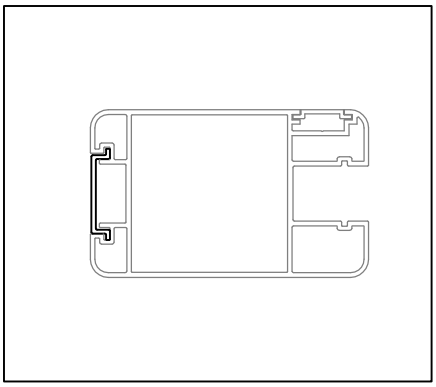

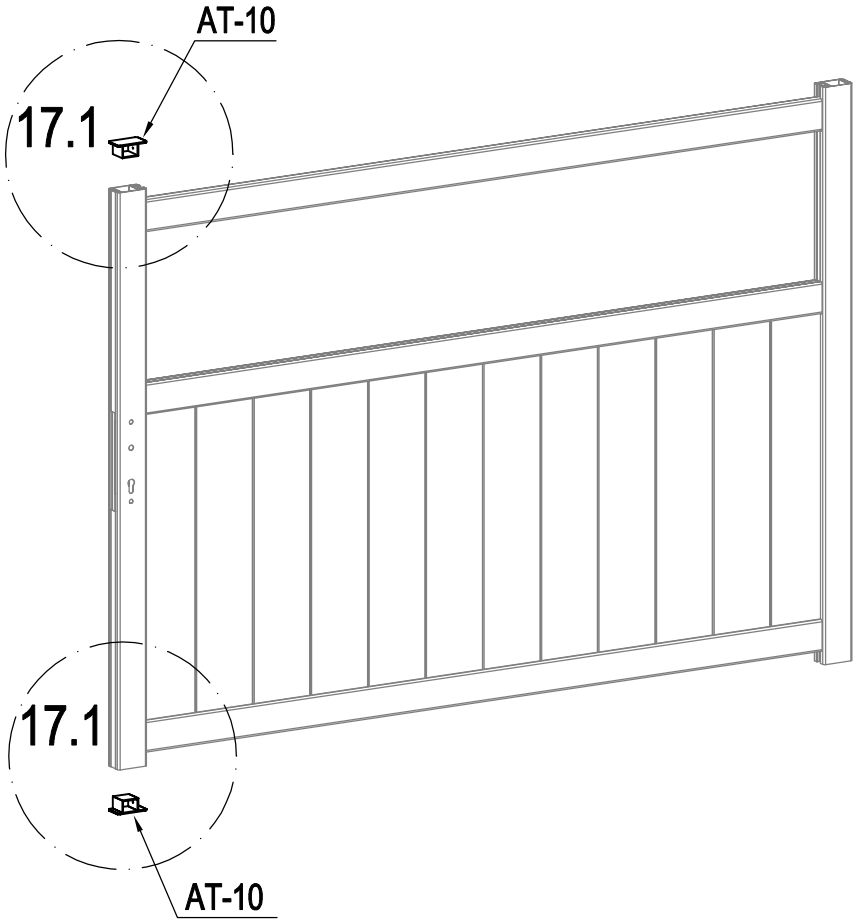

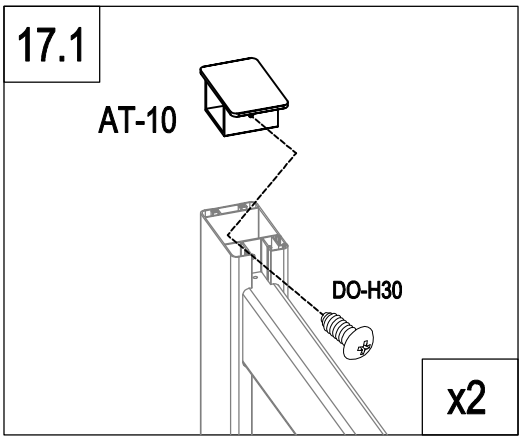

	AT-10	2
	DO-H30	2

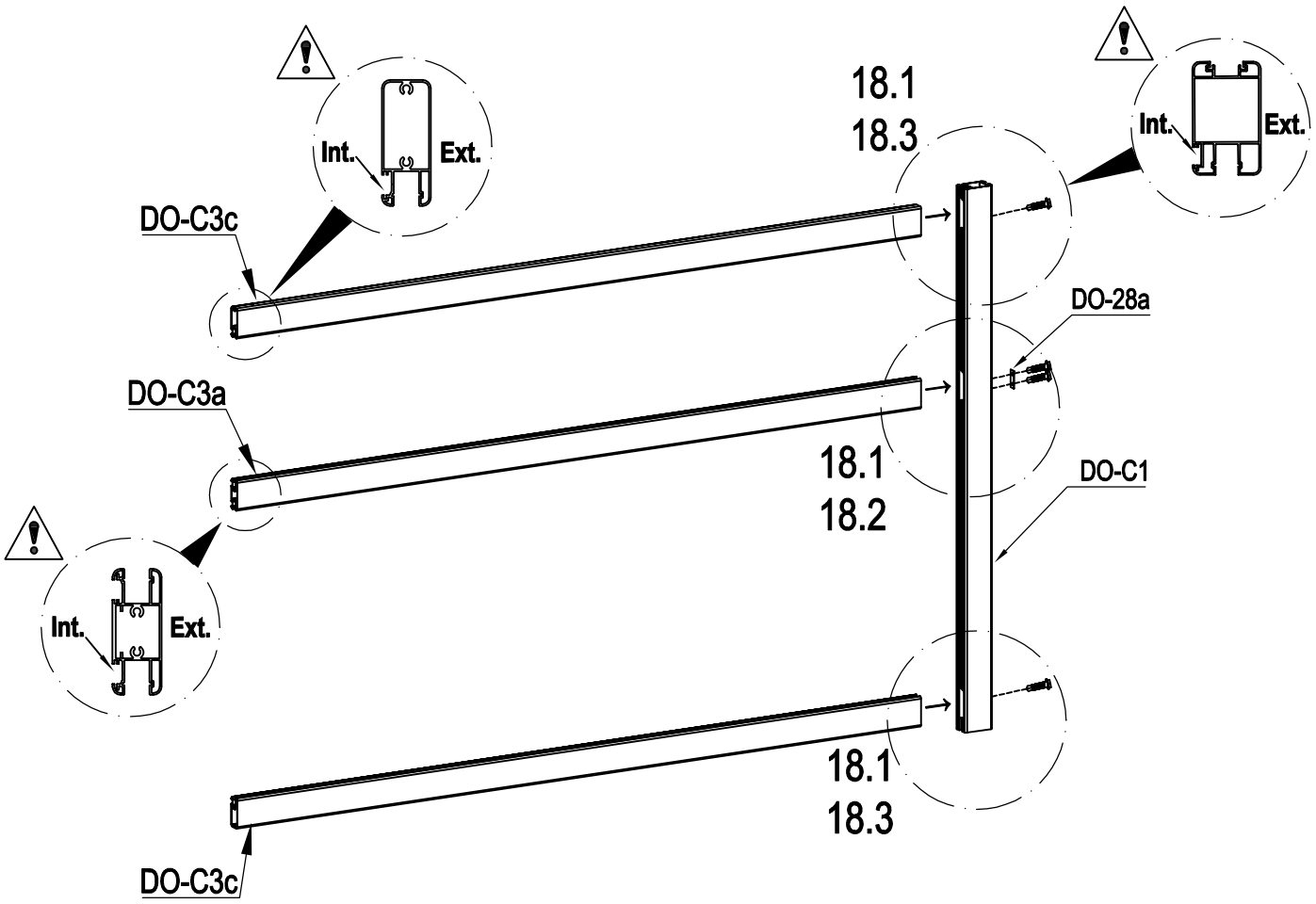

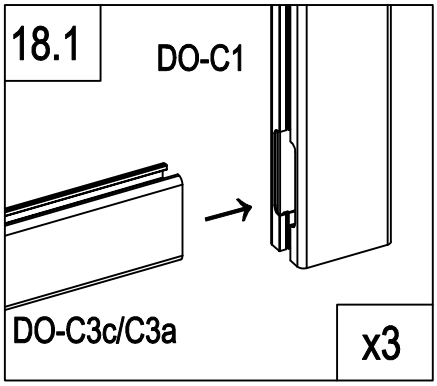

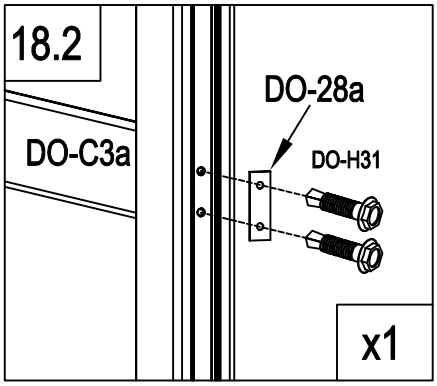

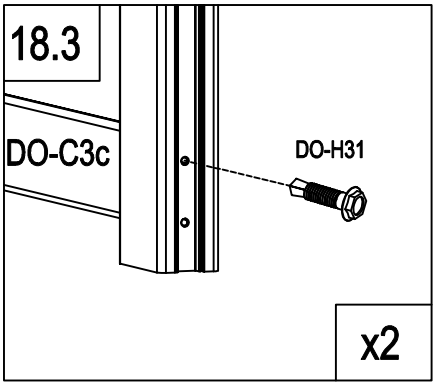

	DO-C1	1
	DO-C3c	2
	DO-C3a	1

	DO-28a	1
	DO-H31	4

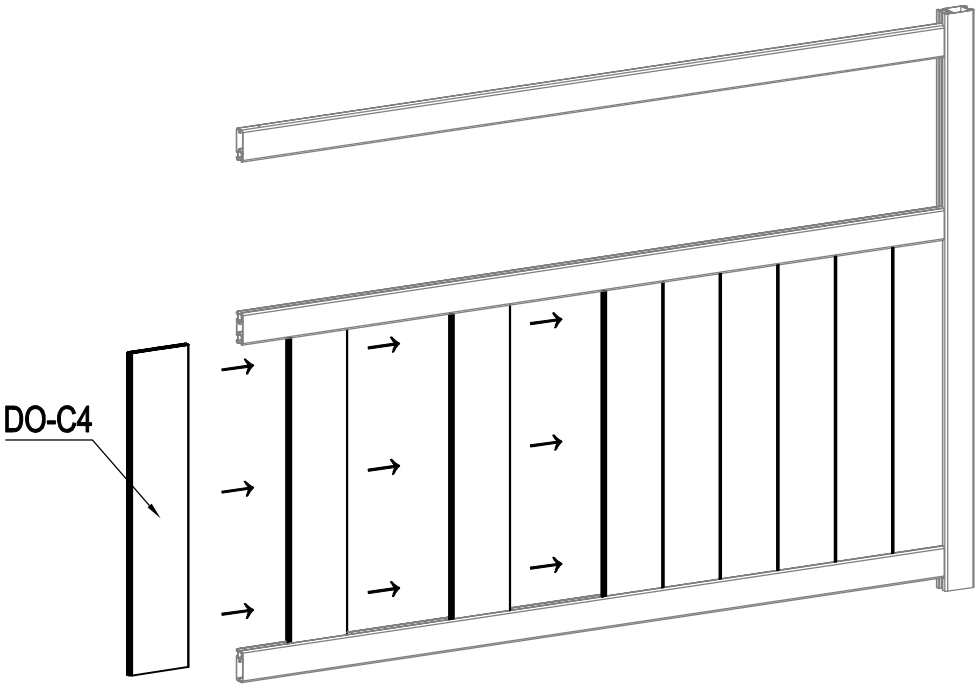

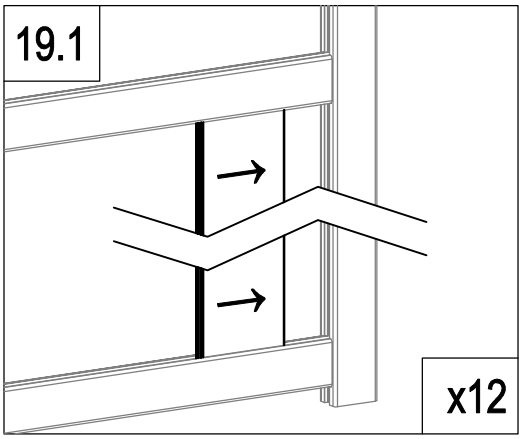

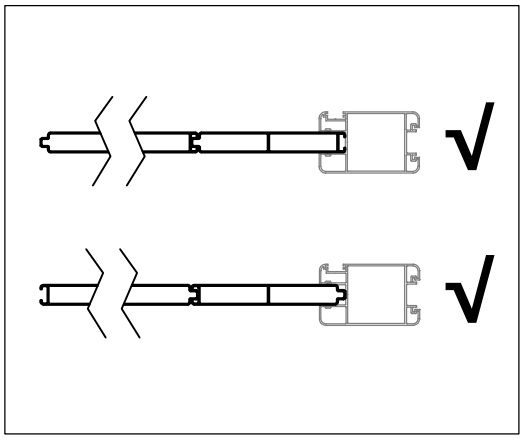

	DO-C4	12

Optional Kit →

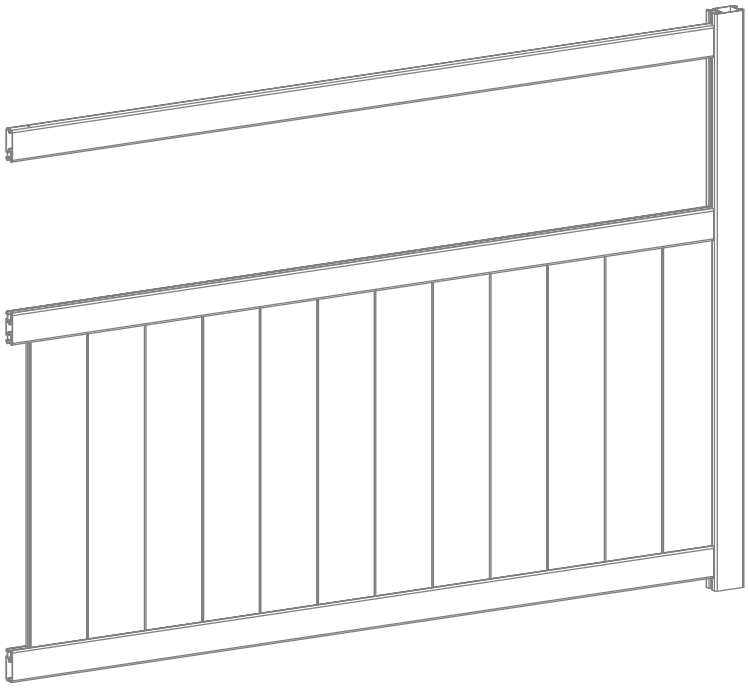

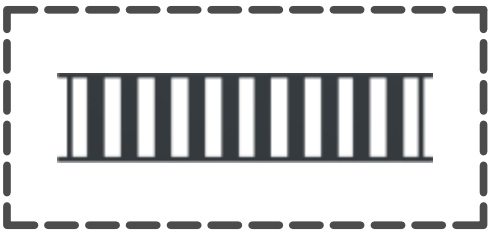

P 22~25

P 26~29

P 30~32

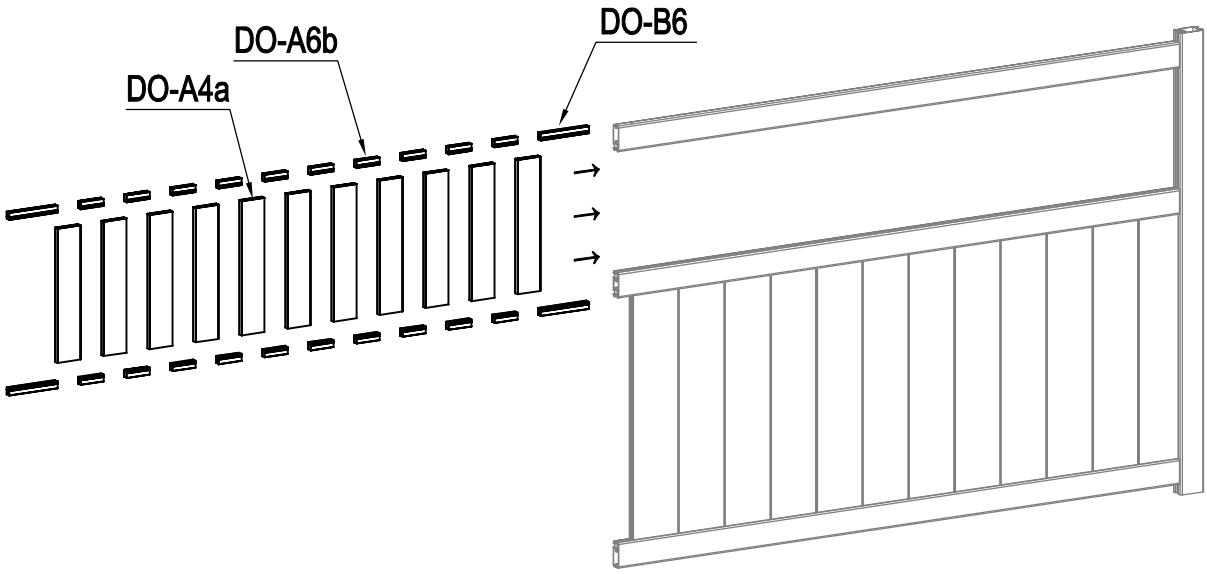

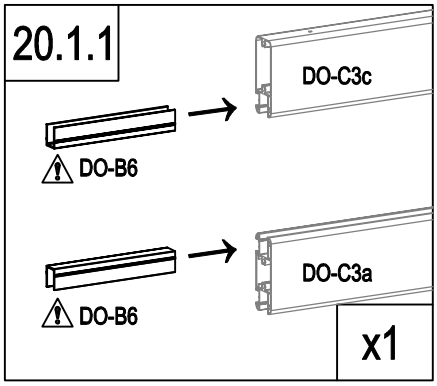

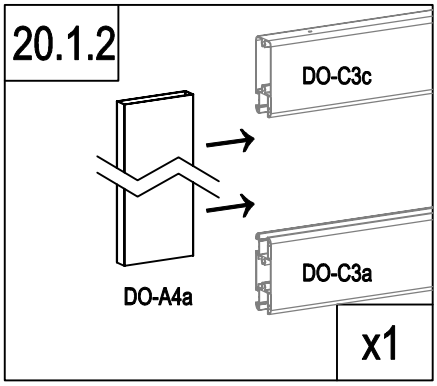

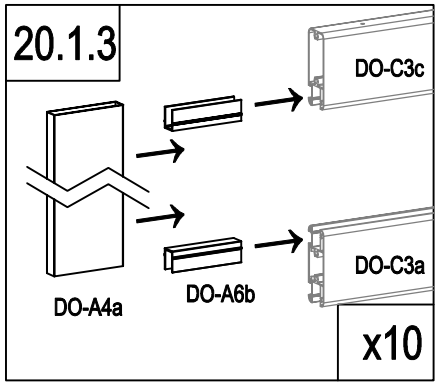

	DO-A4a	406mm	11
	DO-B6	163mm	4
	DO-A6b	77.5mm	20

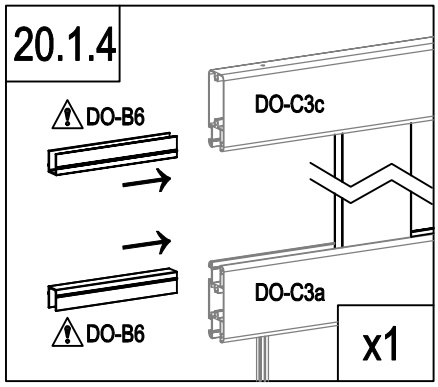

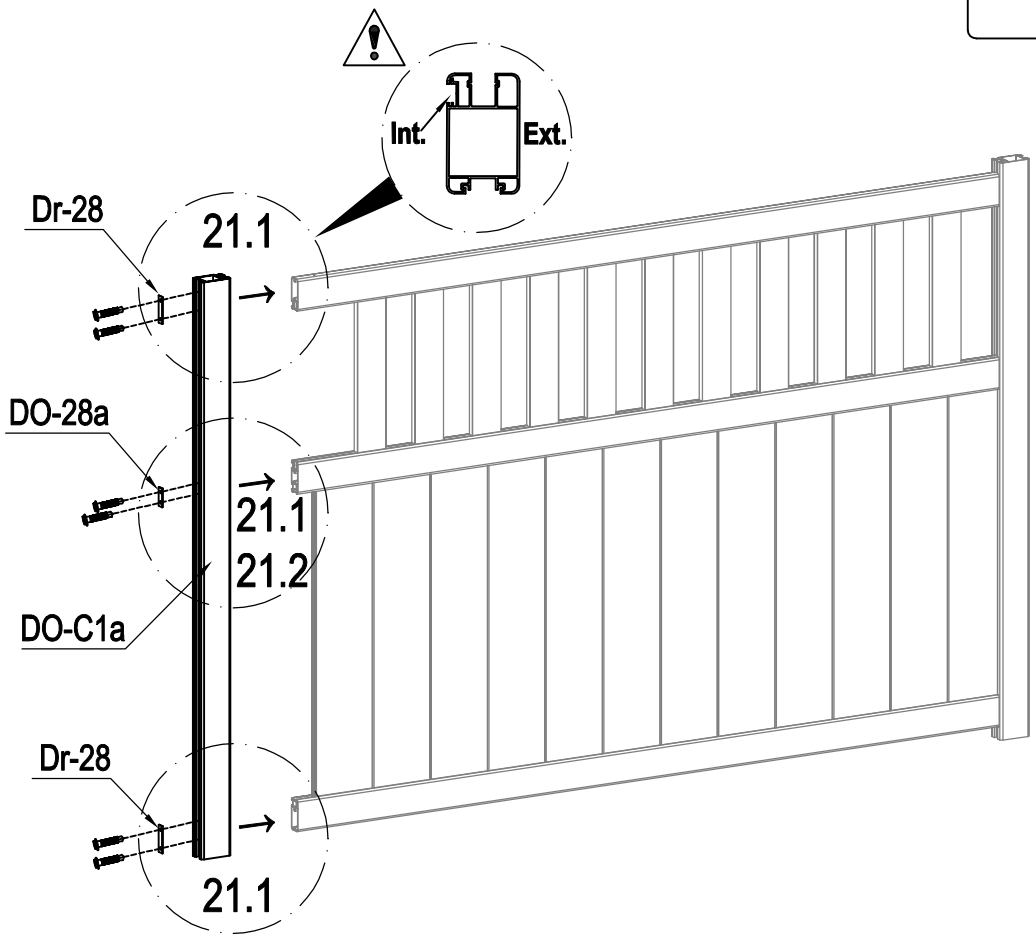

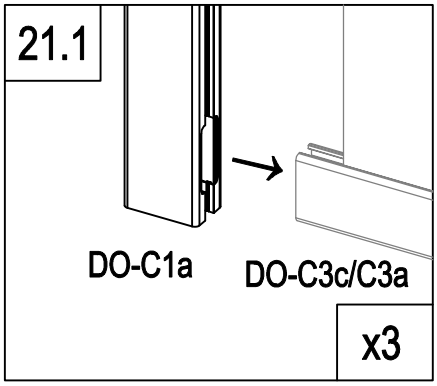

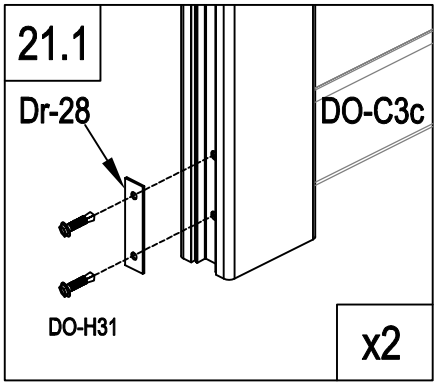

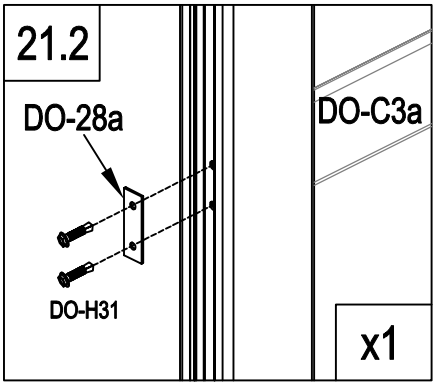

	DO-C1a	1
	Dr-28	2
	DO-28a	1
	DO-H31	6

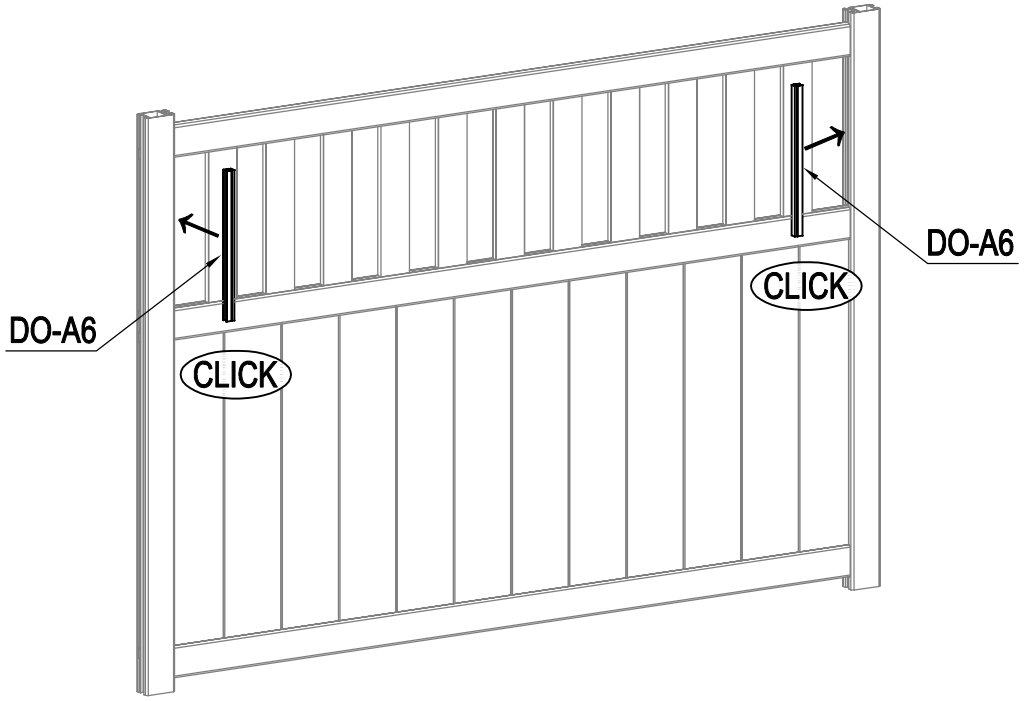

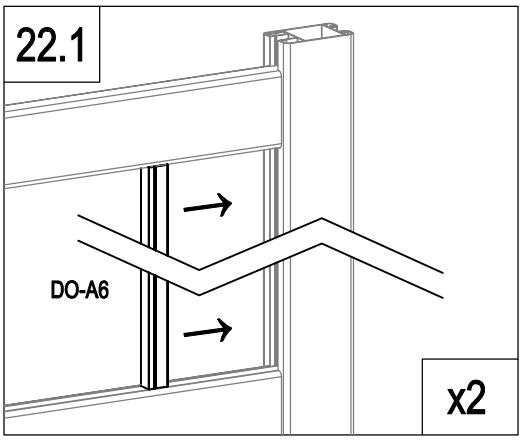

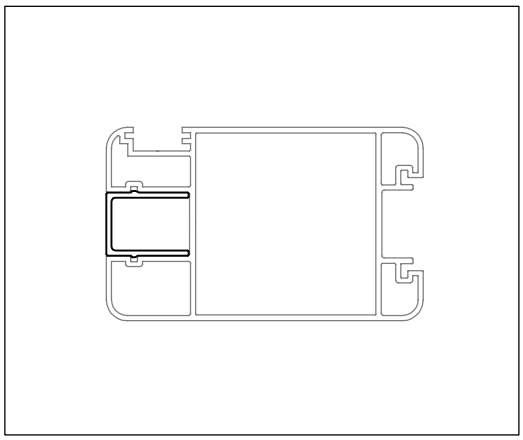

	DO-A6	2

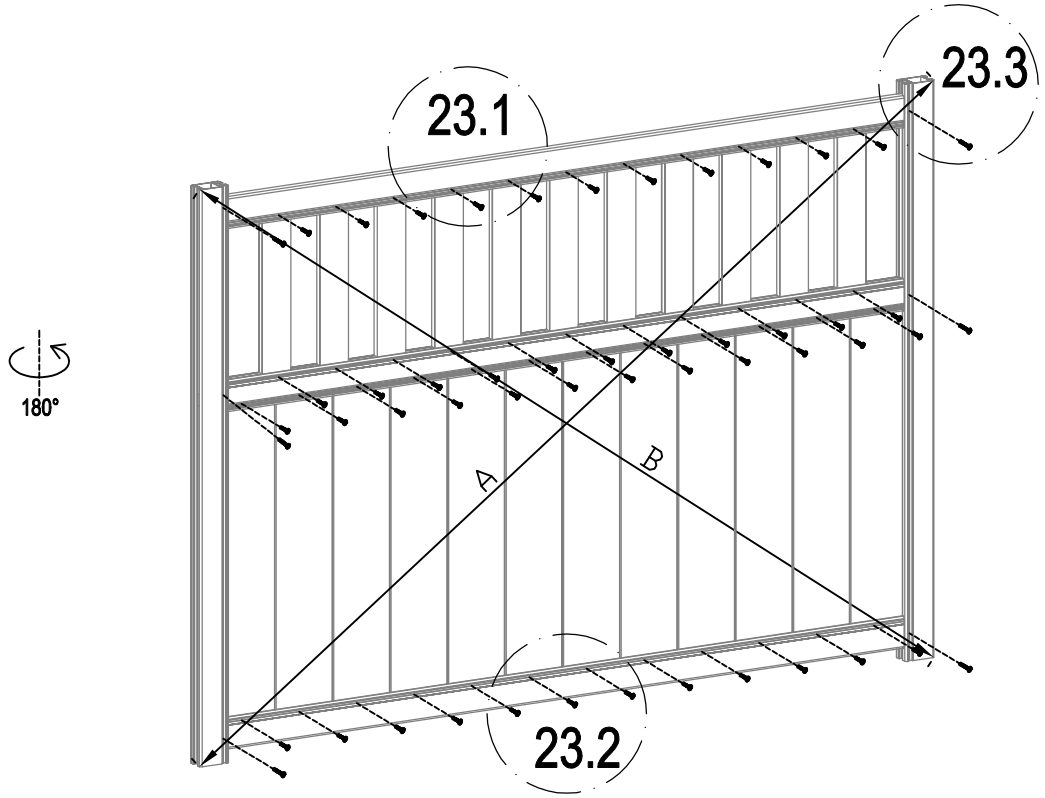

⚠ A=B

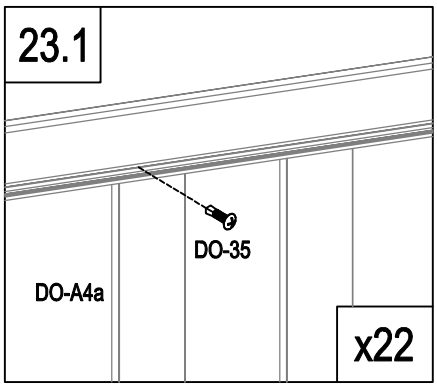

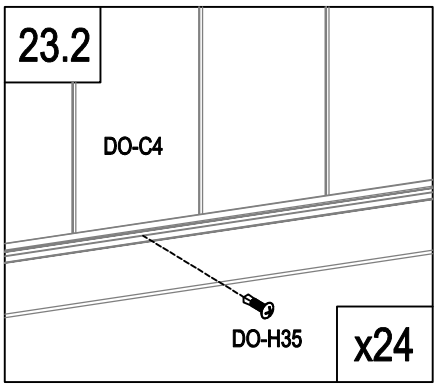

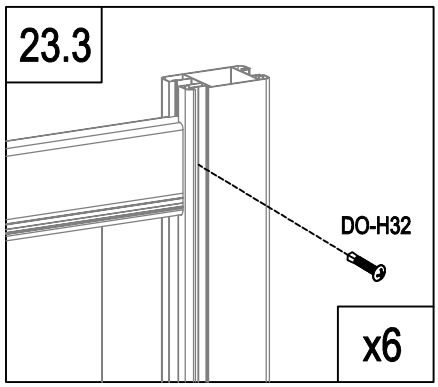

	DO-35	22
	DO-H35	24
	DO-H32	6

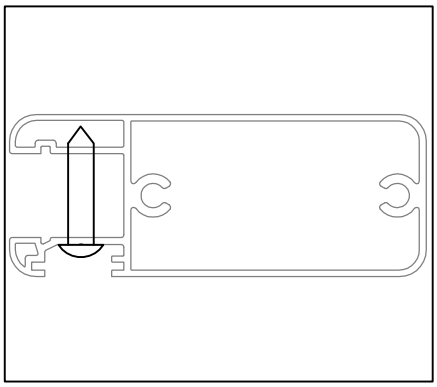

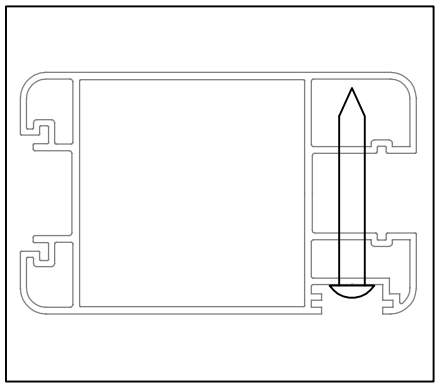

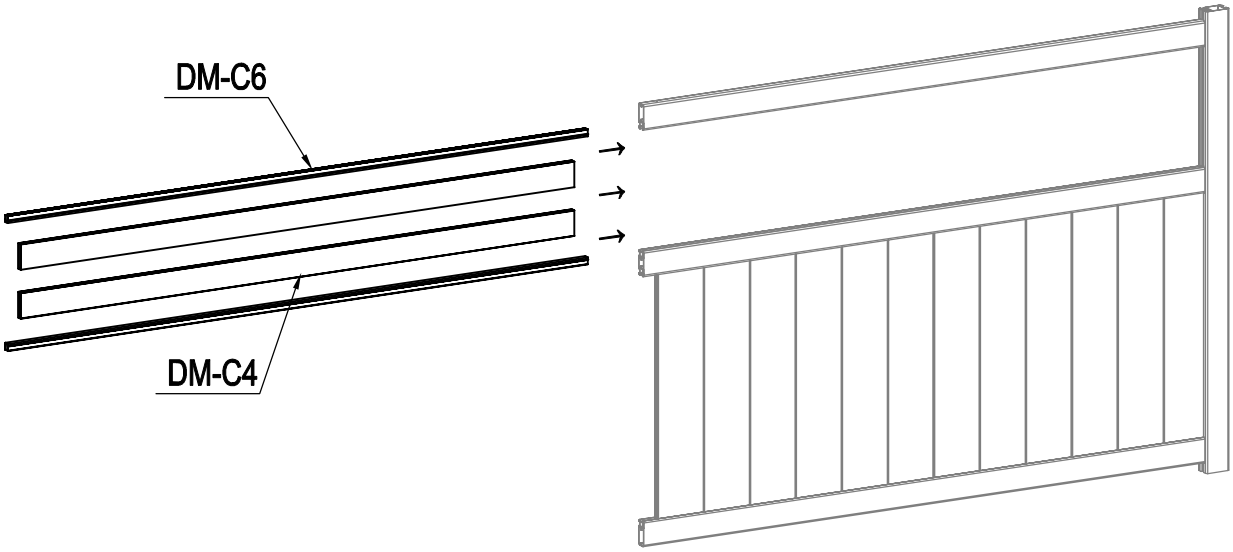

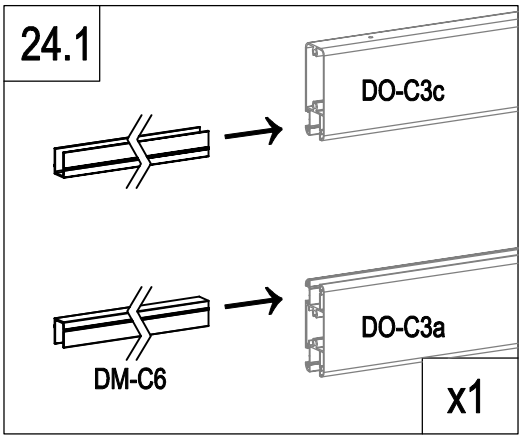

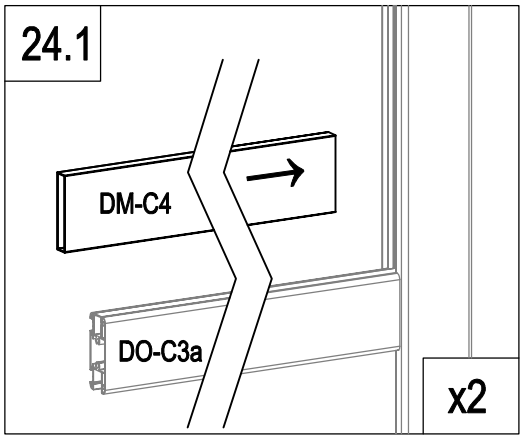

	DM-C4	2
	DM-C6	2

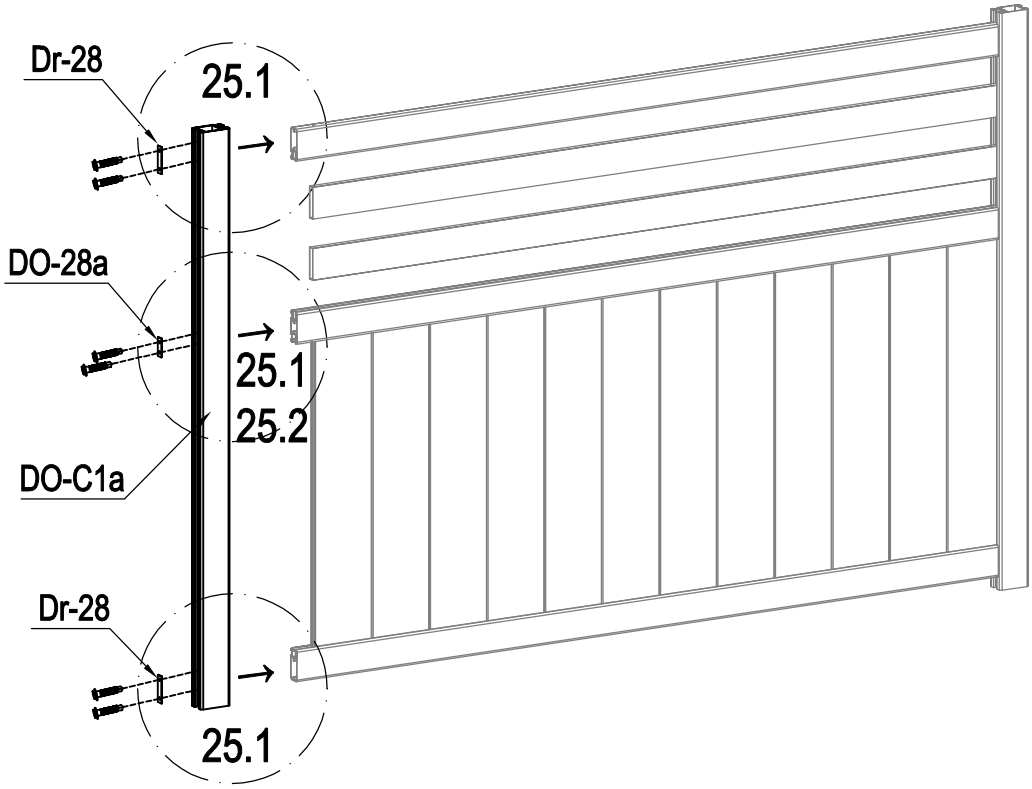

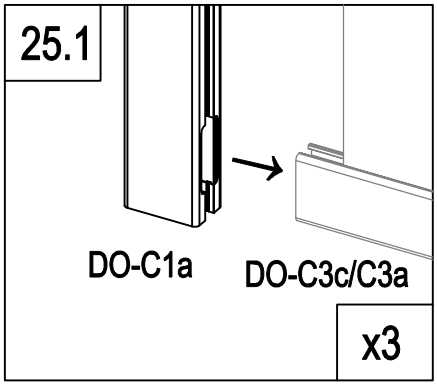

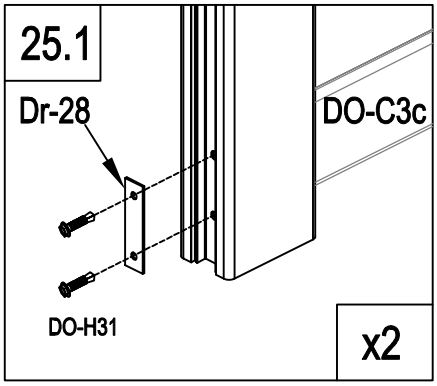

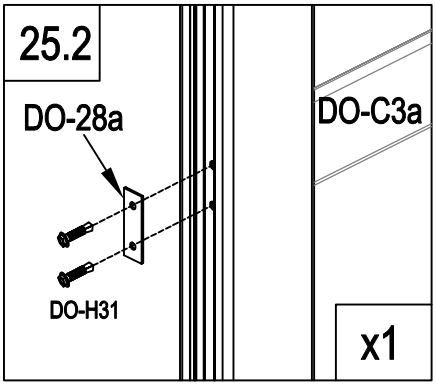

	DO-C1a	1
	Dr-28	2
	DO-28a	1
	DO-H31	6

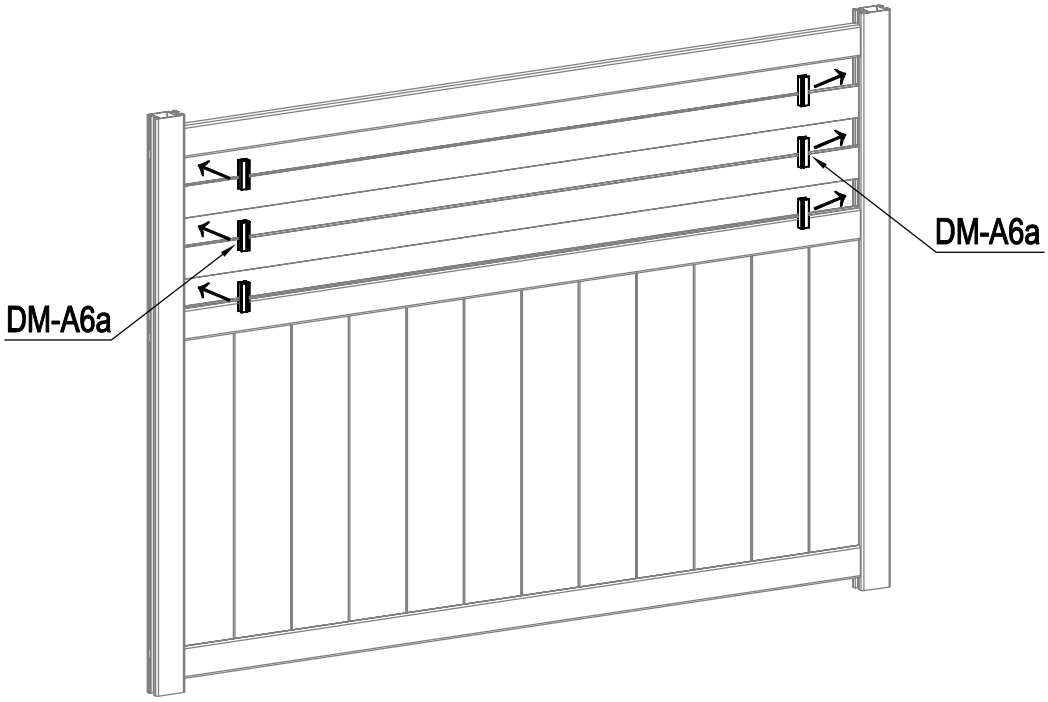

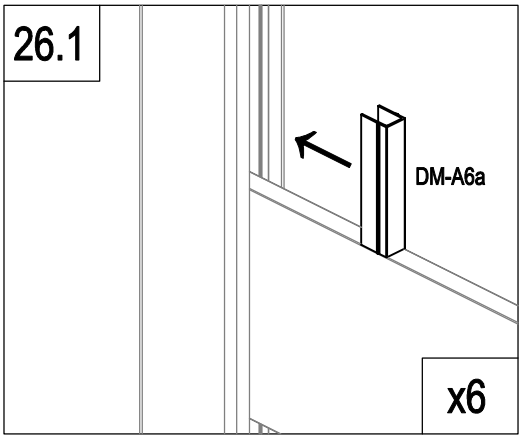

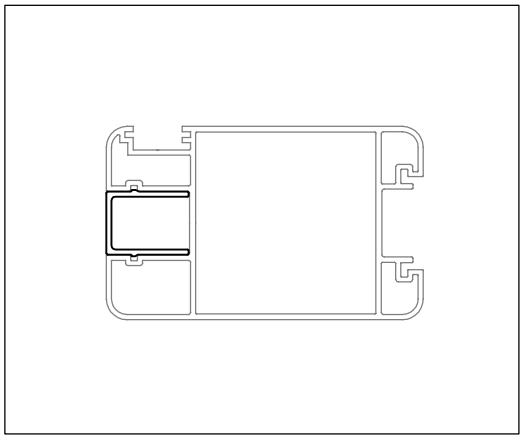

	DM-A6a	6

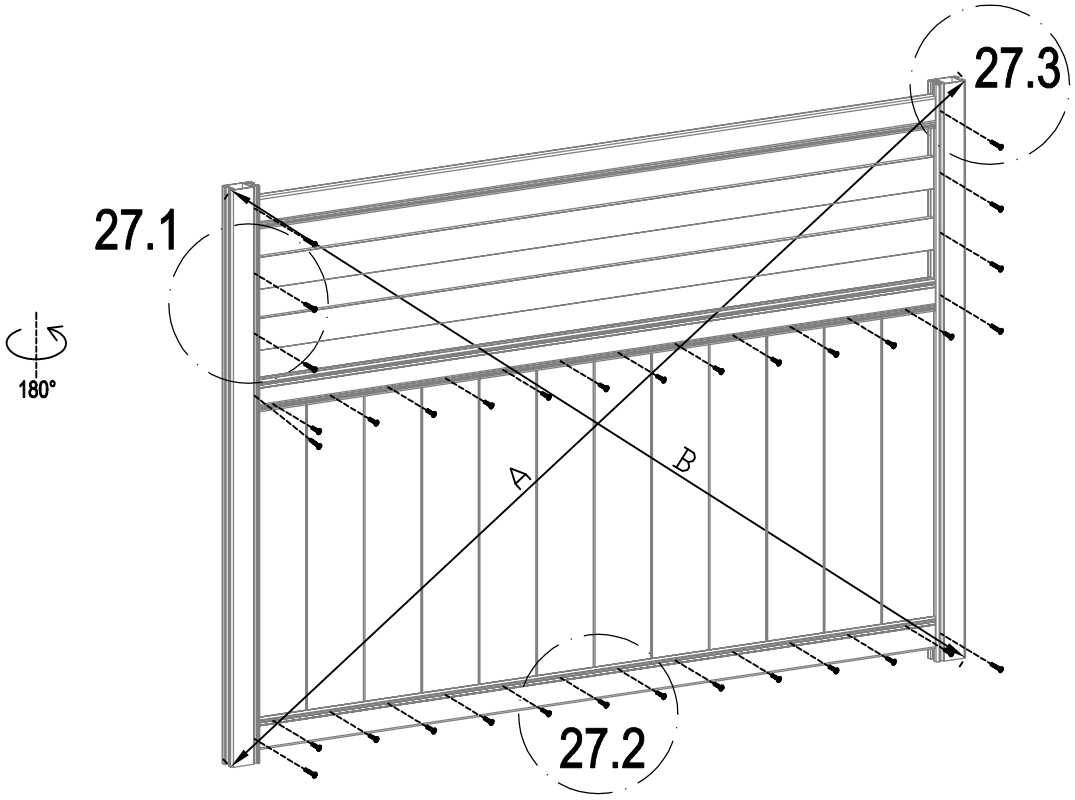

A=B

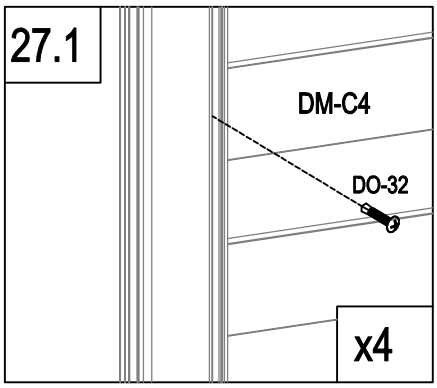

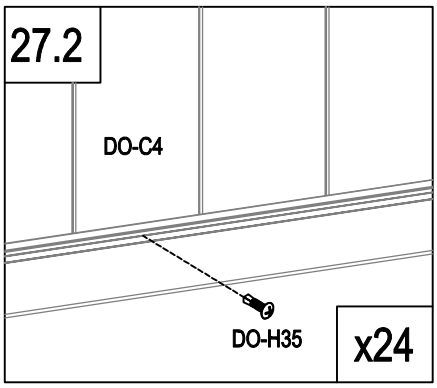

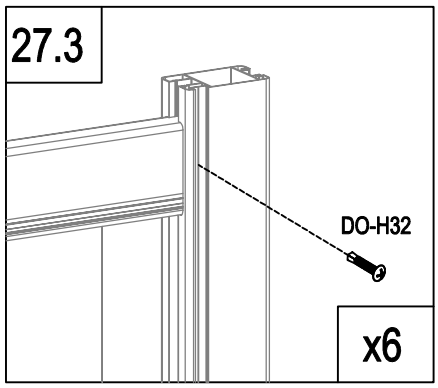

	DO-32	4
	DO-H35	24
	DO-H32	6

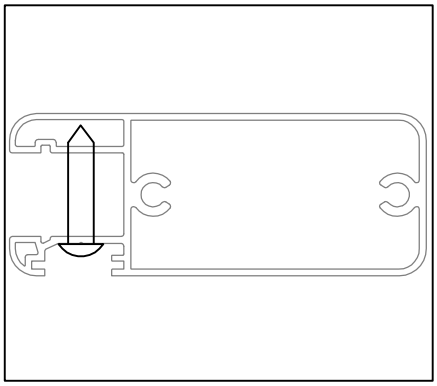

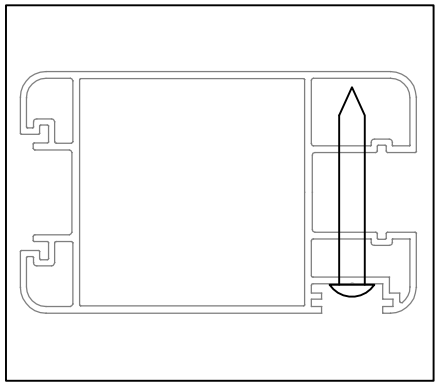

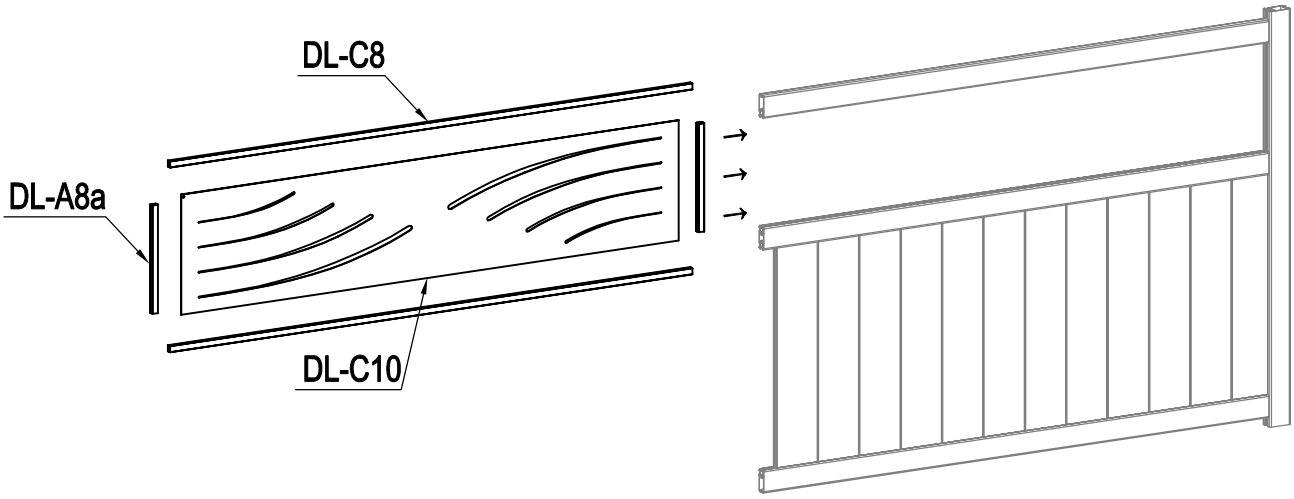

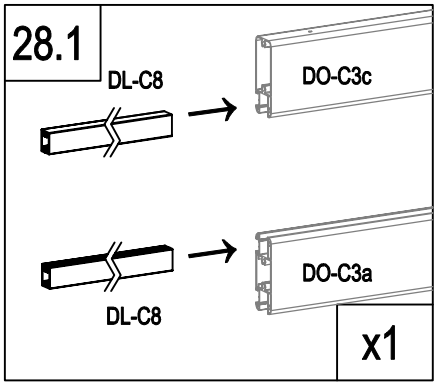

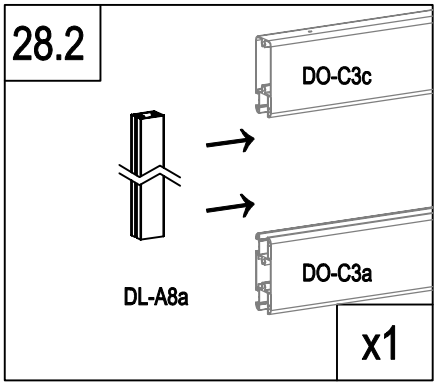

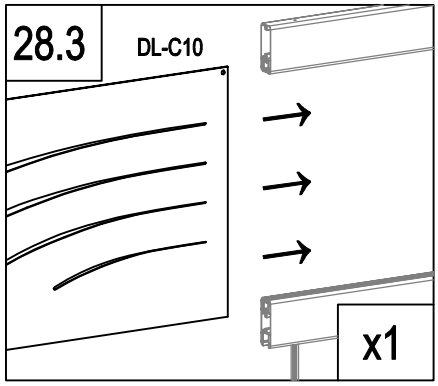

	DL-C10	1
	DL-C8	2
	DL-A8a	2

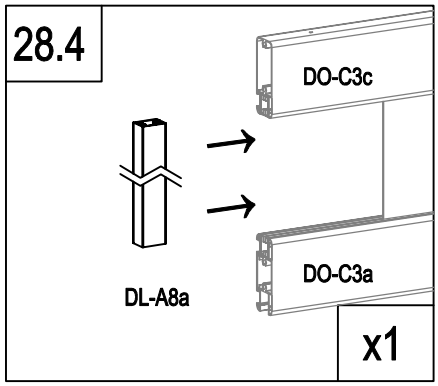

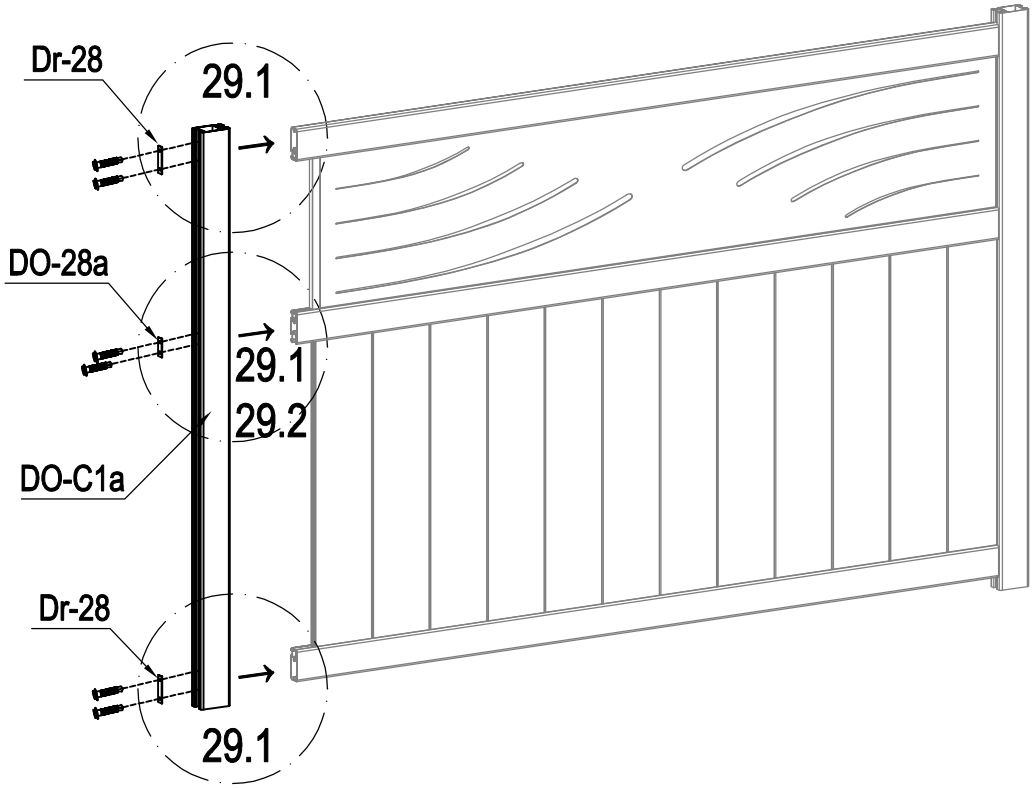

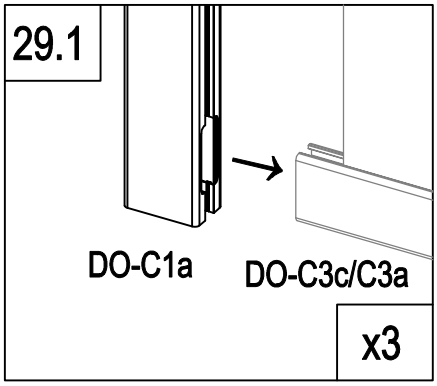

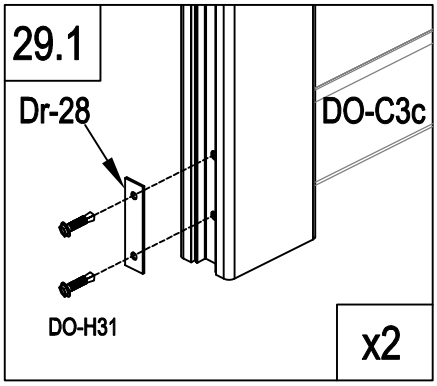

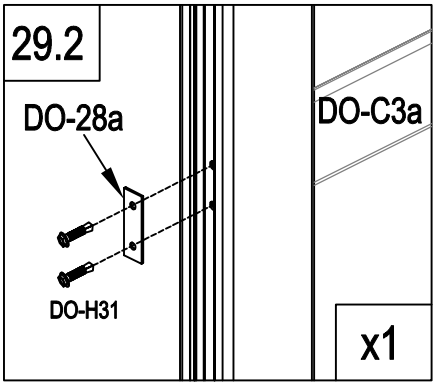

	DO-C1a	1
	Dr-28	2
	DO-28a	1
	DO-H31	6

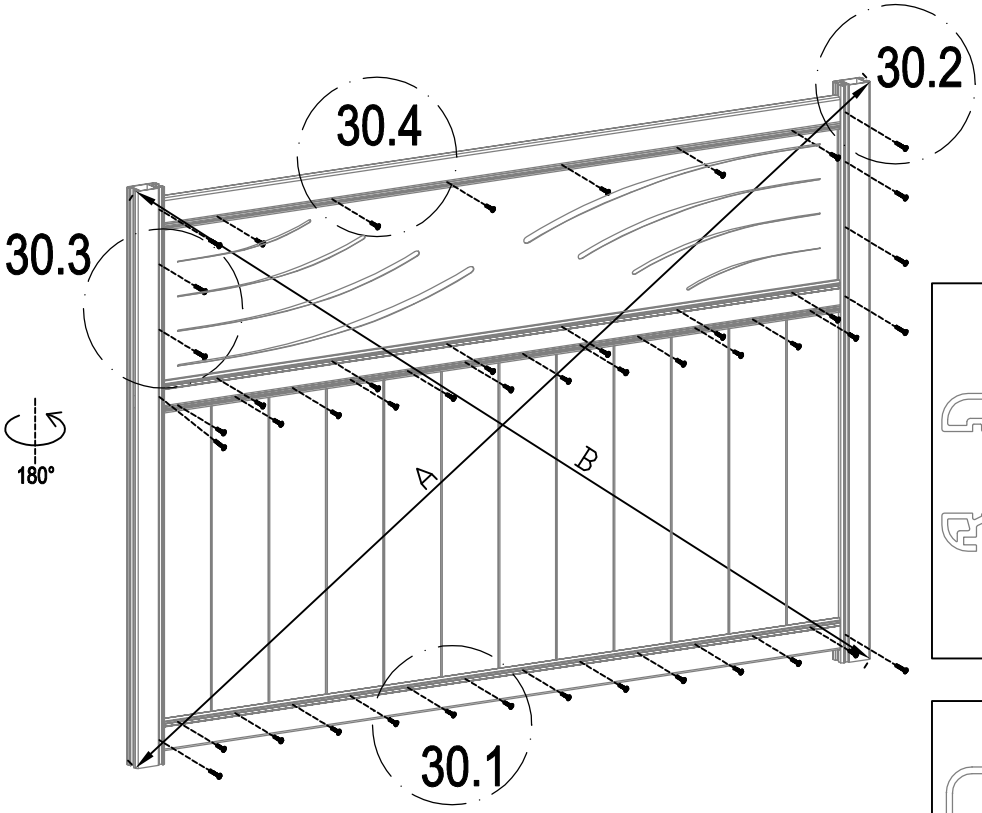

A=B

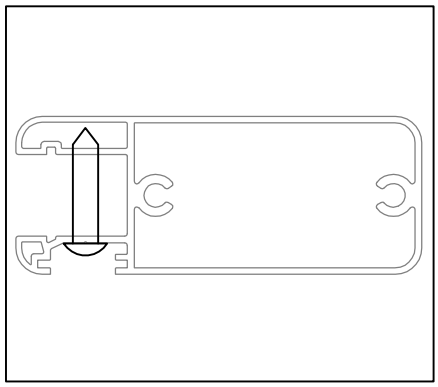

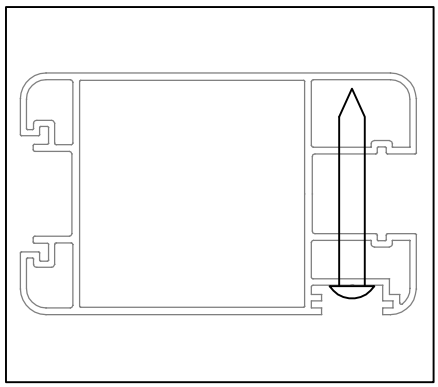

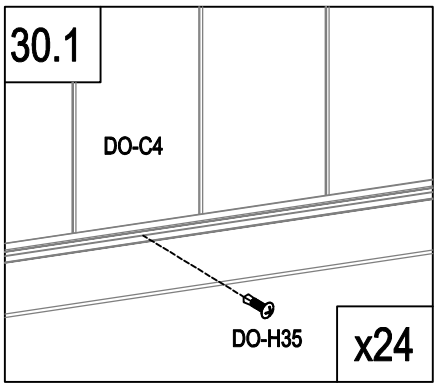

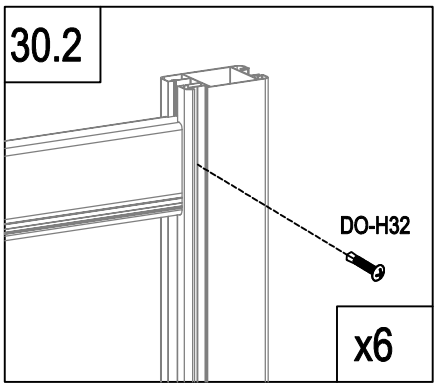

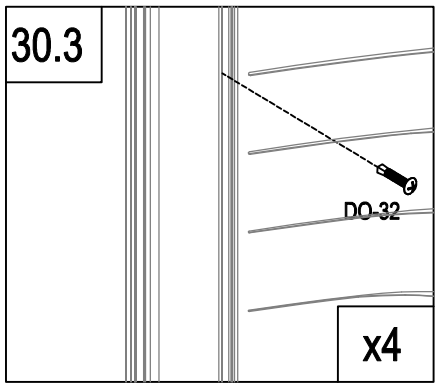

	DO-32	4
	DO-35	12
	DO-H35	24
	DO-H32	6

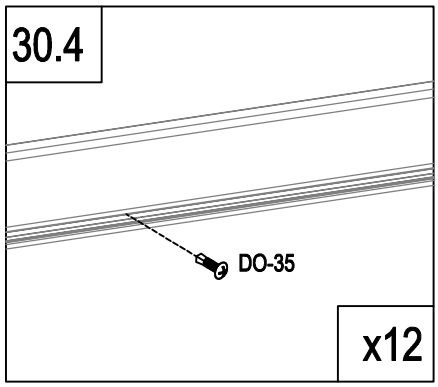

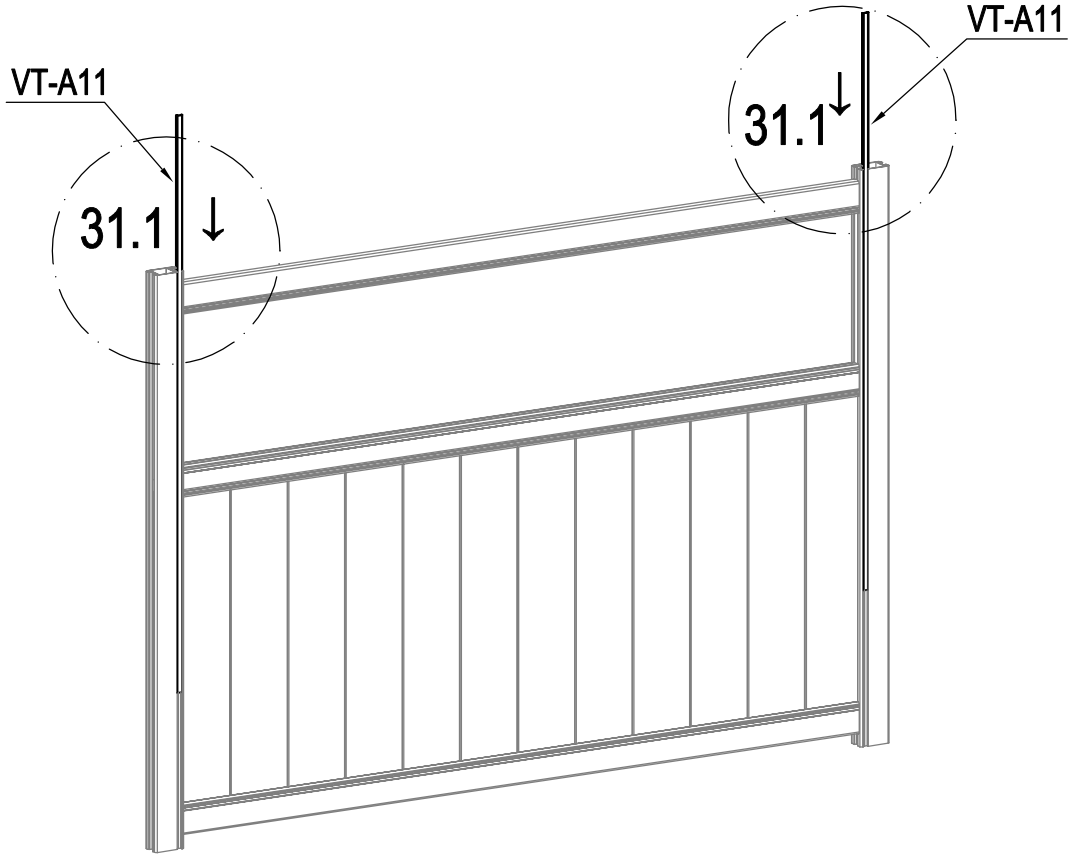

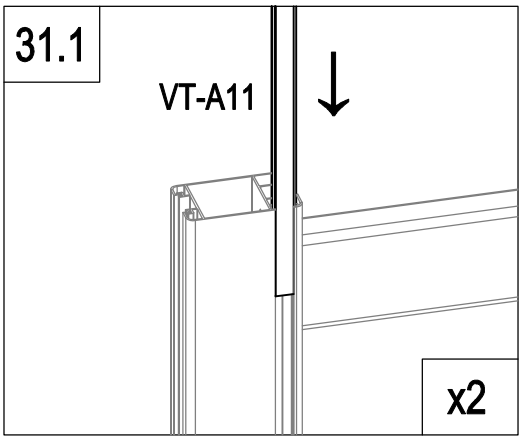

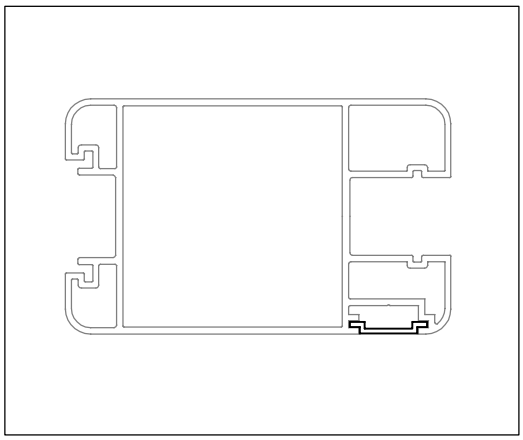

	VT-A11	2

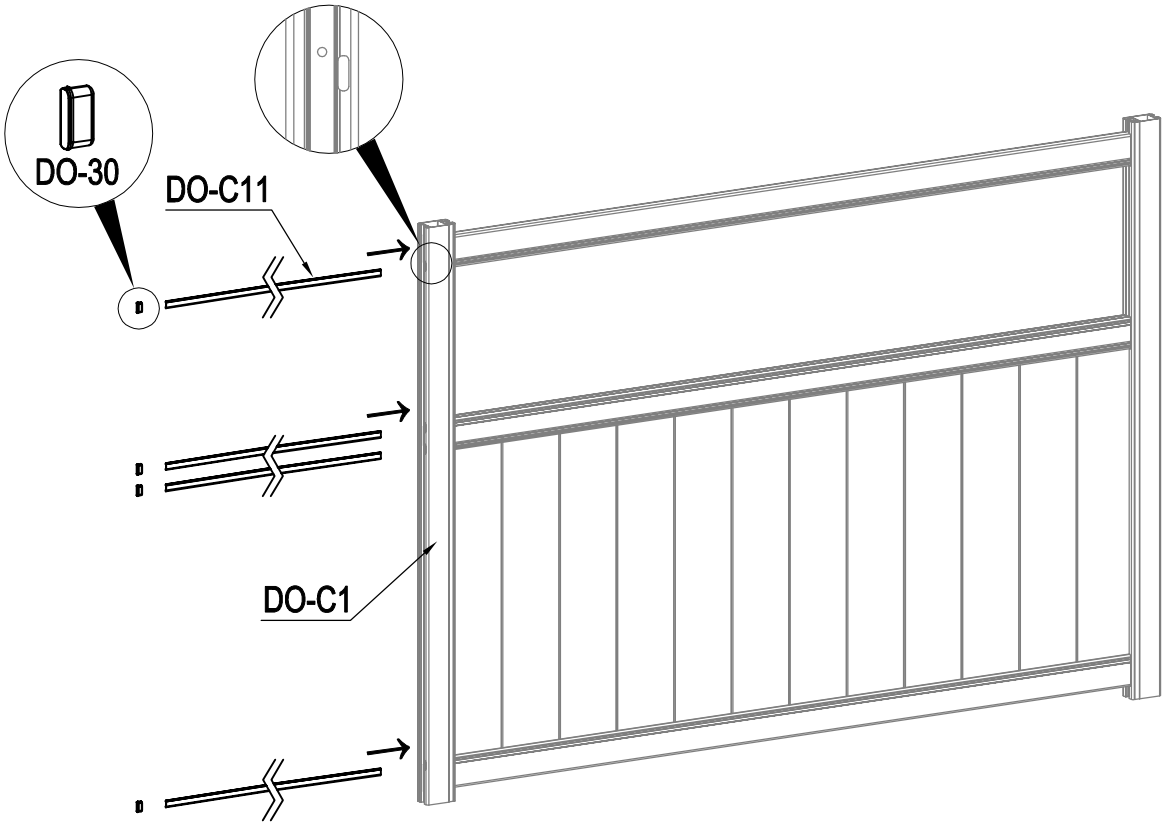

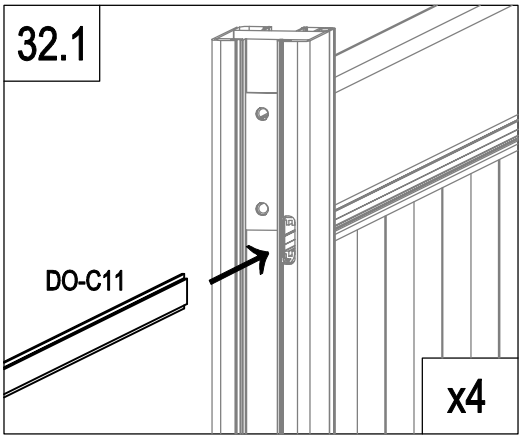

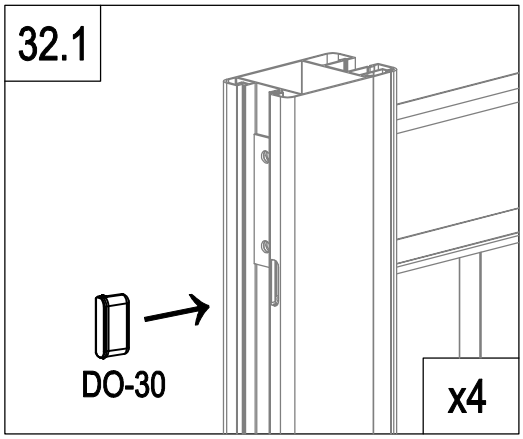

	DO-C11	4
	DO-30	4

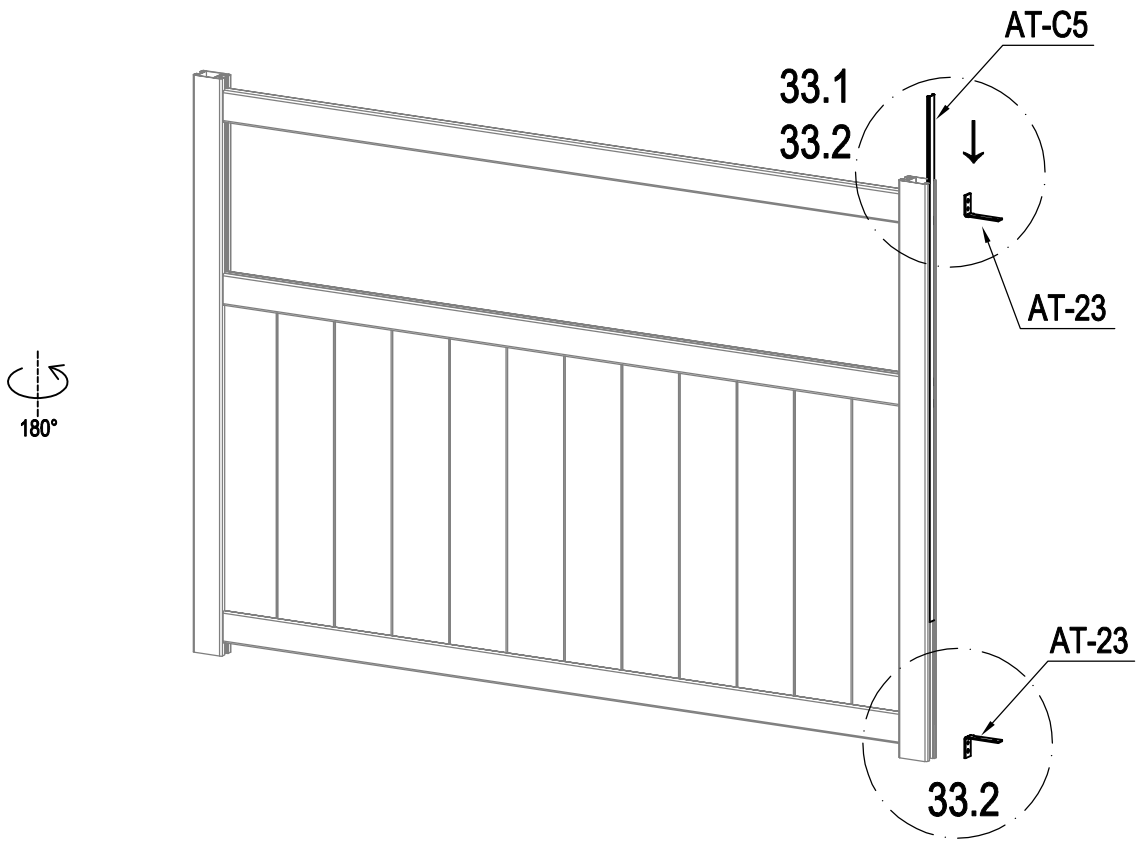

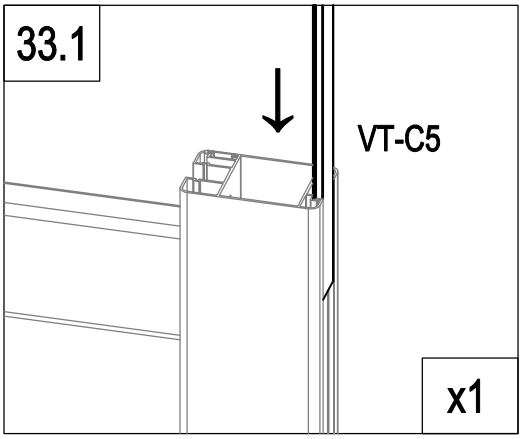

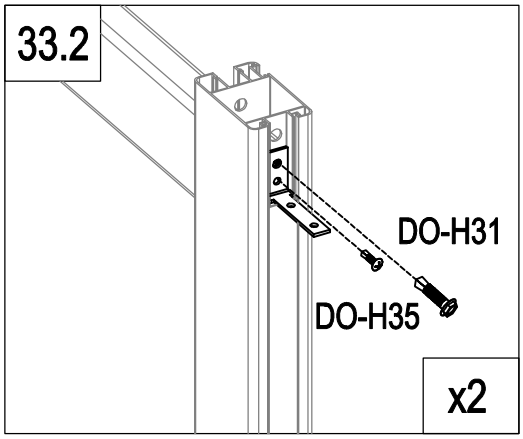

	VT-C5	1
	AT-23	2
	DO-H31	2
	DO-H35	2

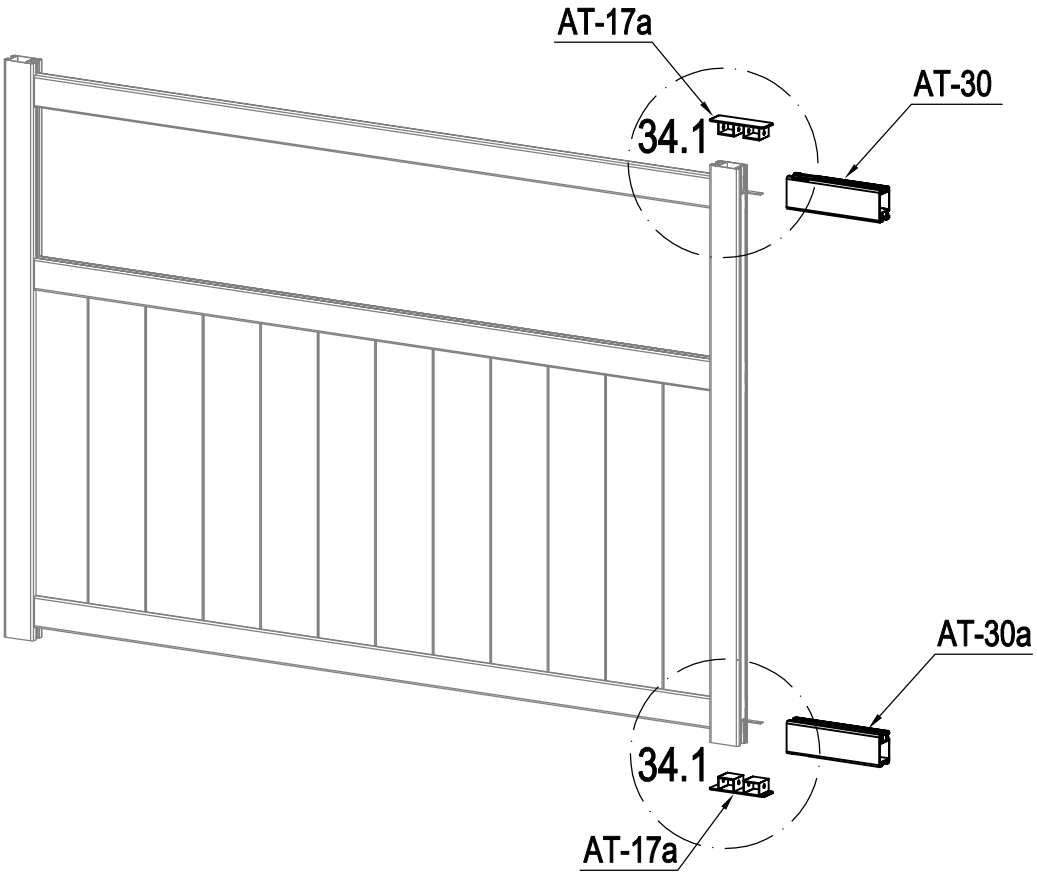

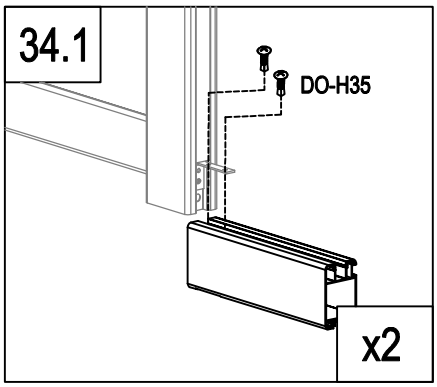

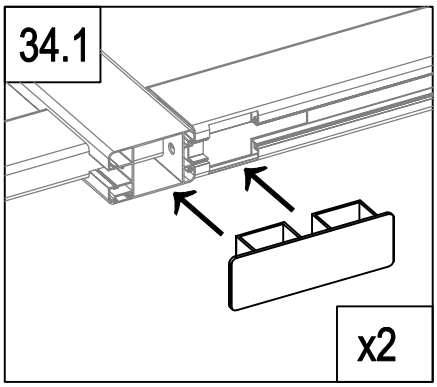

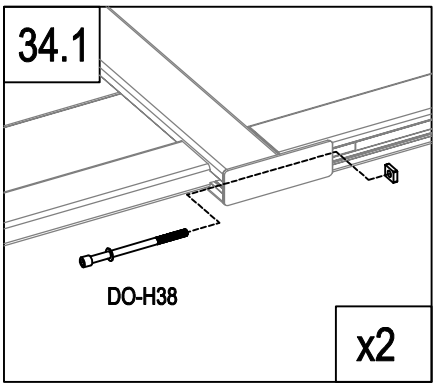

	AT-30	1
	AT-30a	1
	AT-17a	2

	DO-H38	2
	DO-H35	4

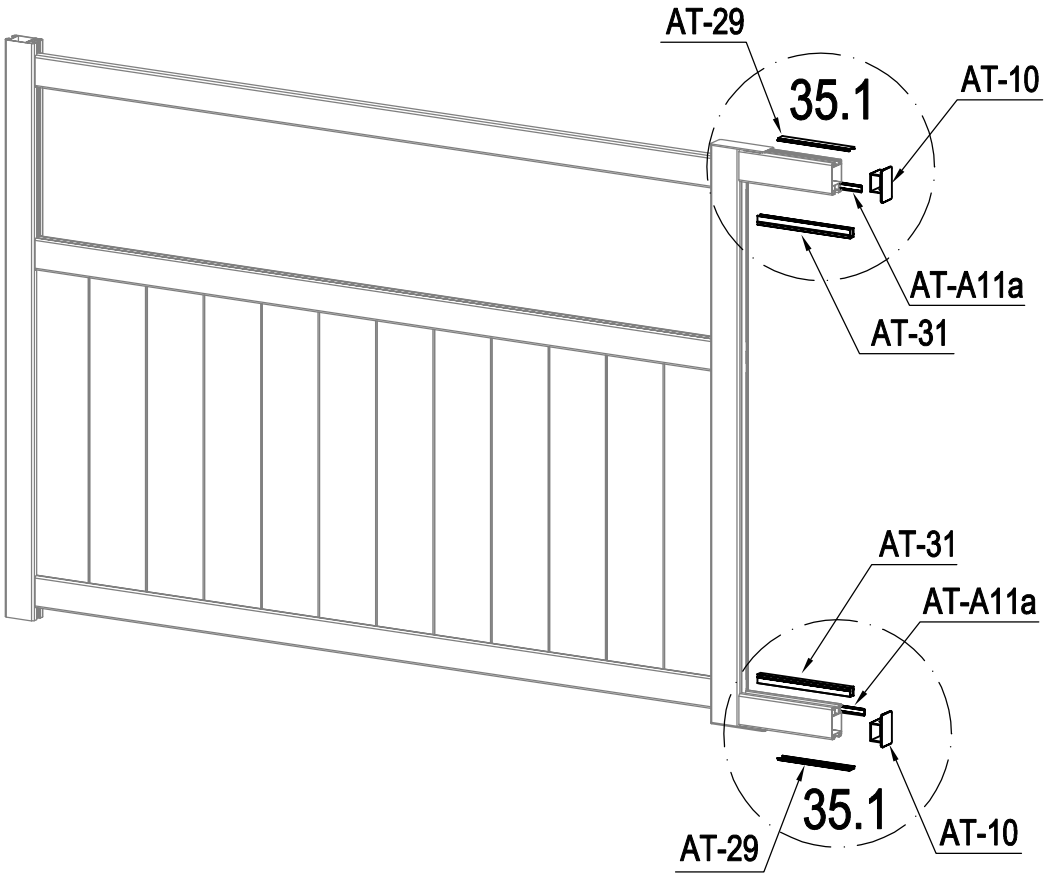

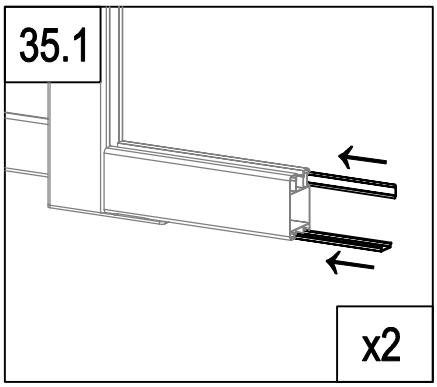

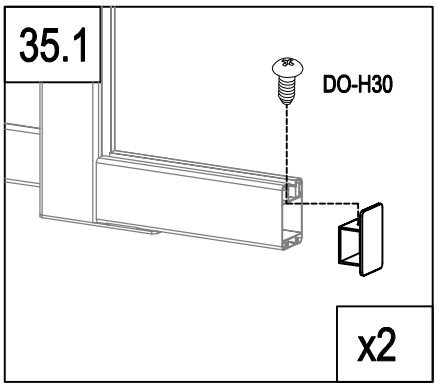

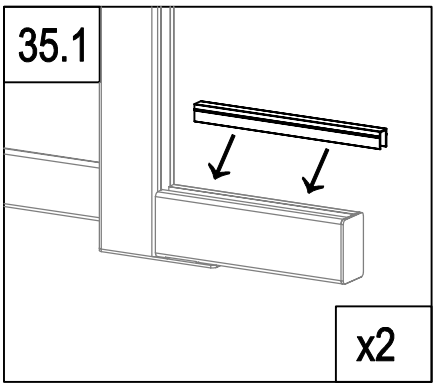

	AT-29	2
	AT-A11a	2
	AT-31	2

	AT-10	2
	DO-H30	2

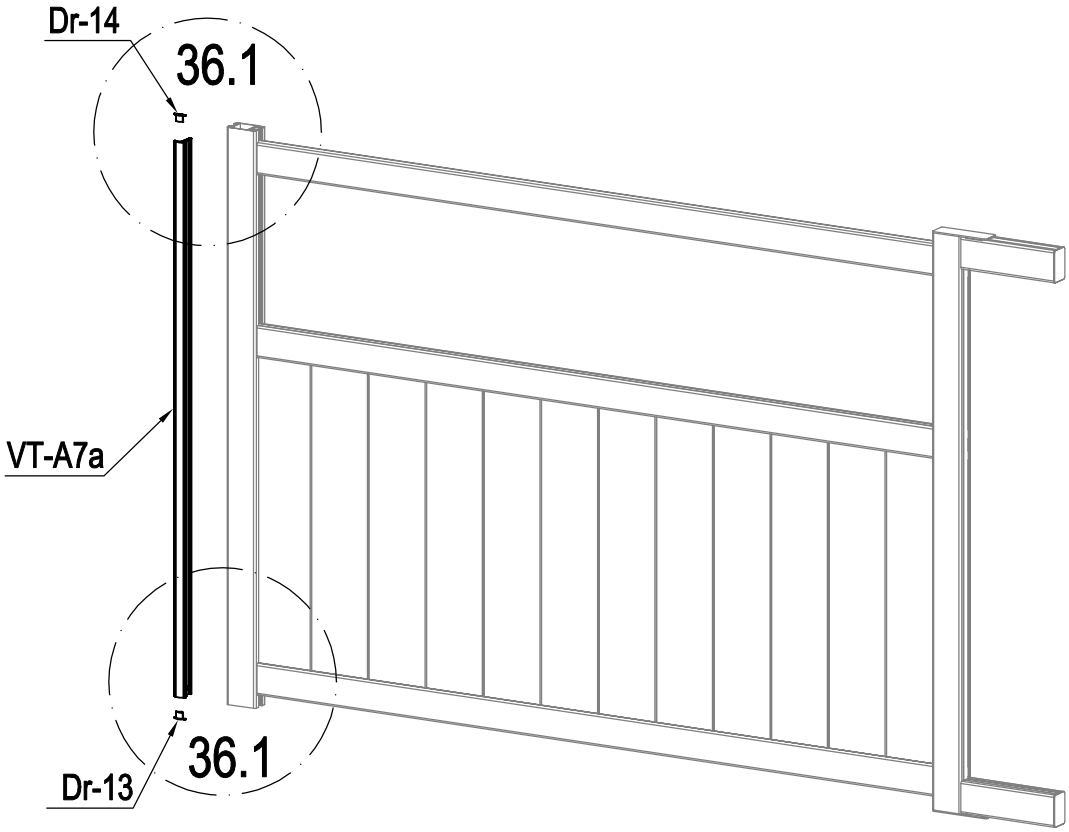

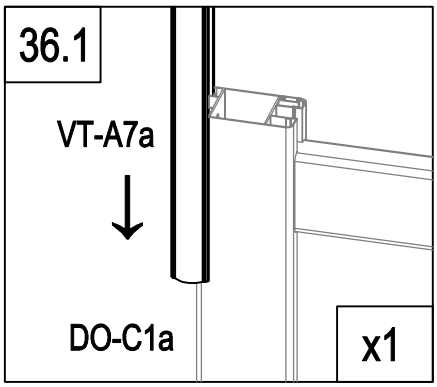

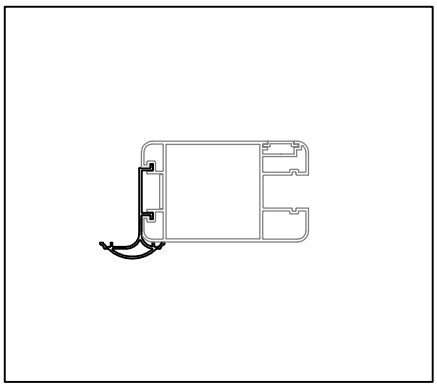

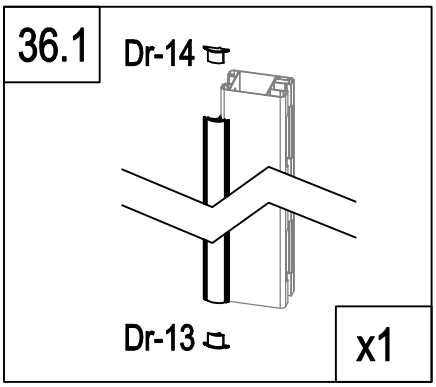

	VT-A7a	1
	Dr-13	1
	Dr-14	1

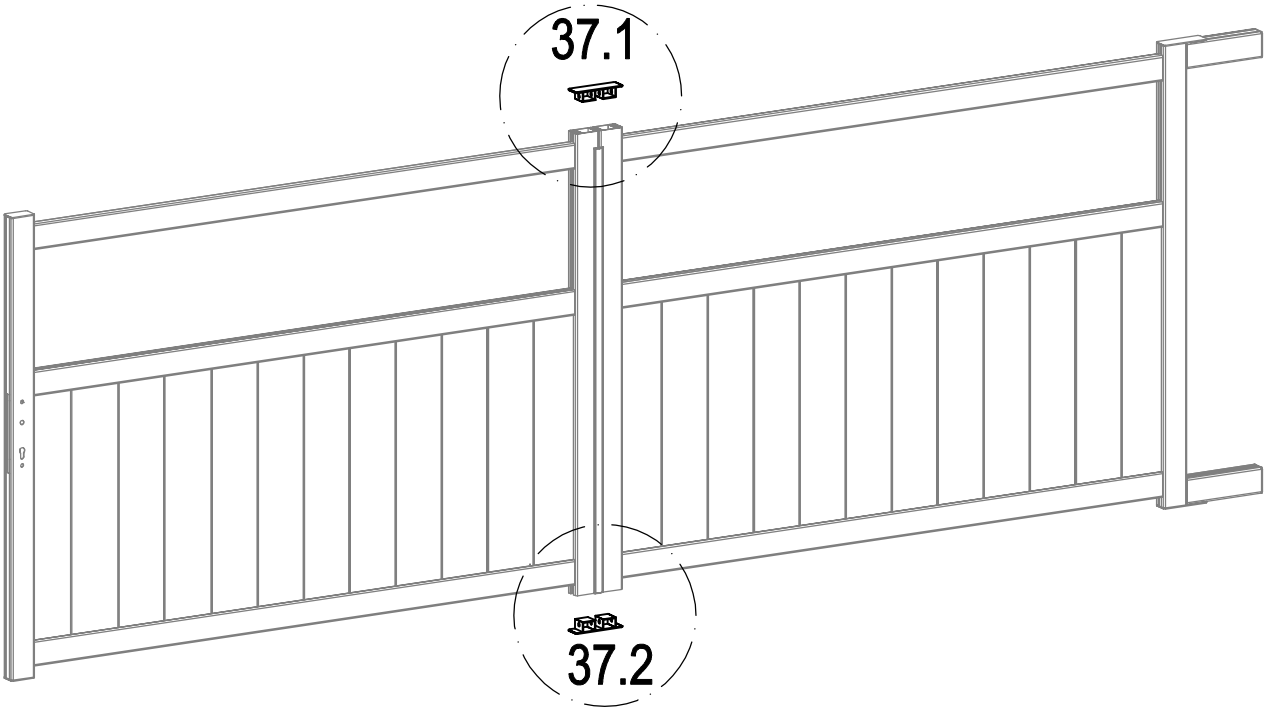

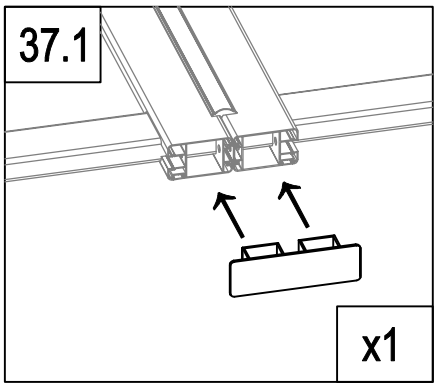

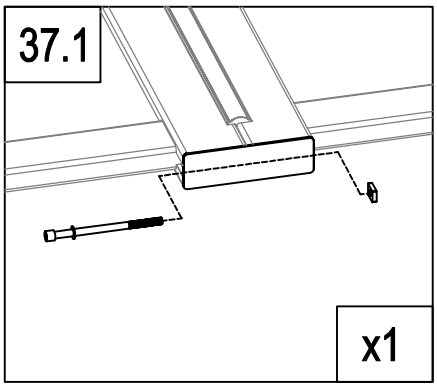

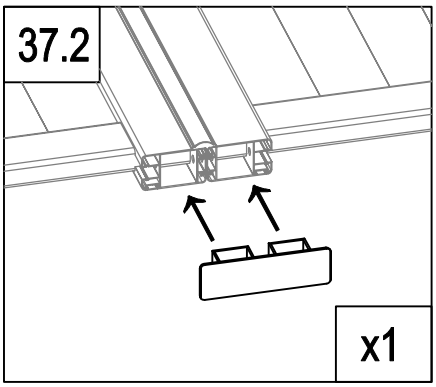

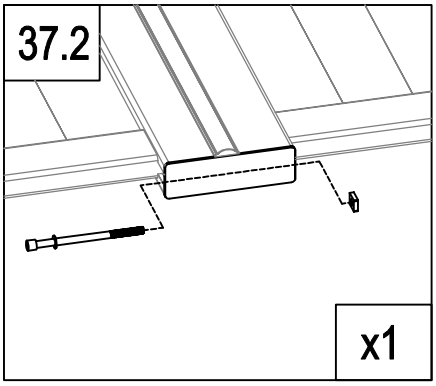

	AT-17	2
	DO-H38	2

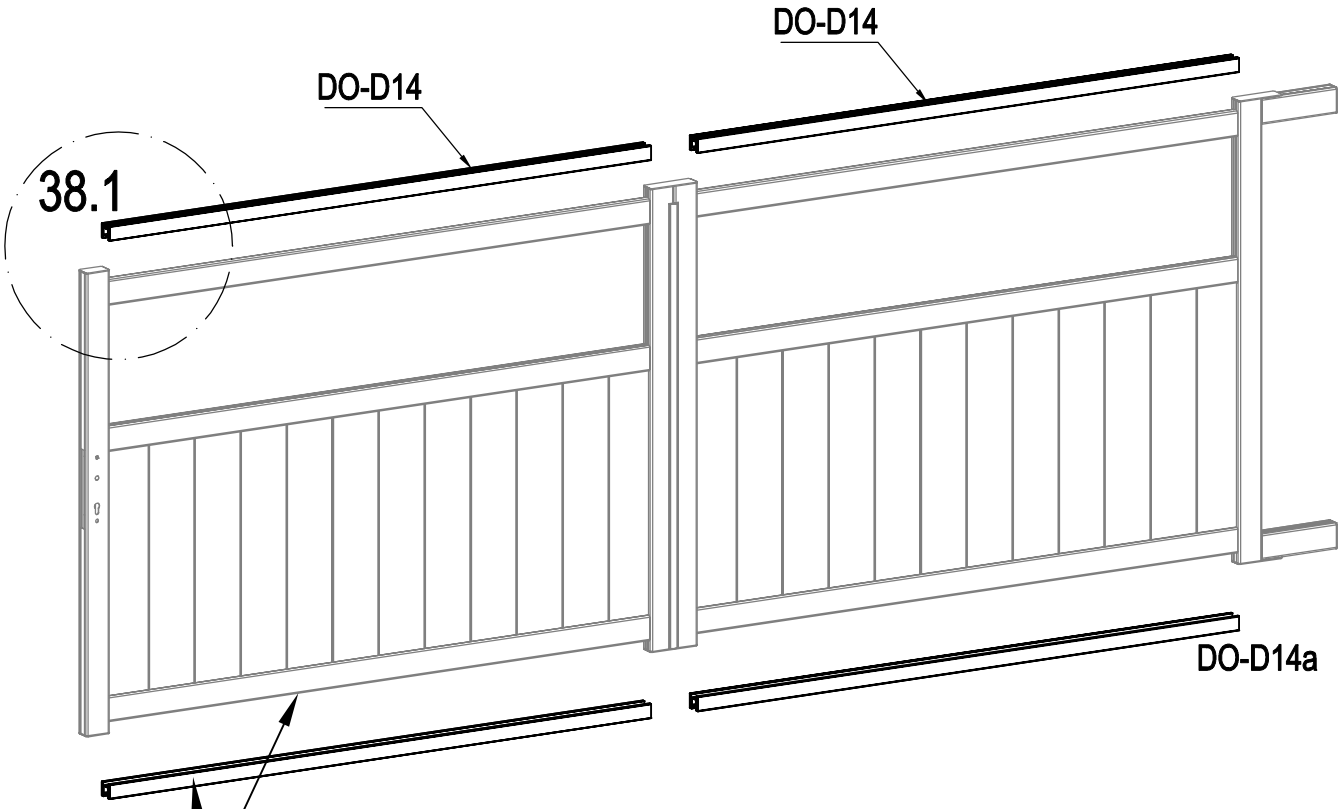

EN: These parts are made for connecting your gate's automation
FR: Ces pièces sont faites pour relier l'automatisation de votre portail
DE: Diese Teile sind für den Anschluss der Automatisierung Ihres Tores vorgesehen
ES: Estas piezas están hechas para conectar la automatización de su puerta
PT: Estas peças são feitas para ligar a automatização do seu portão
IT: Queste parti sono realizzate per collegare l'automazione del vostro cancello
NL: Deze onderdelen zijn gemaakt voor het aansluiten van de automatisering van uw poort.
PL: Te części są wykonane do podłączenia automatyki bramy.

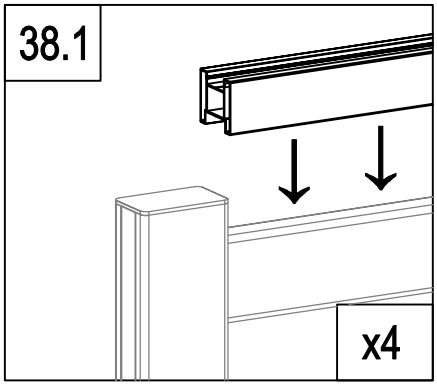

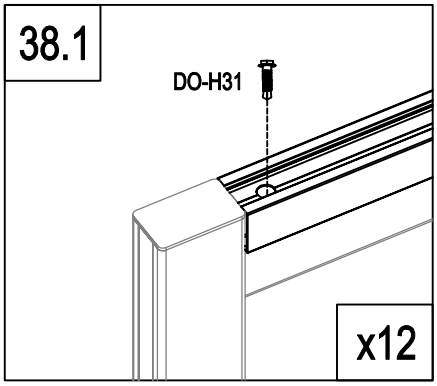

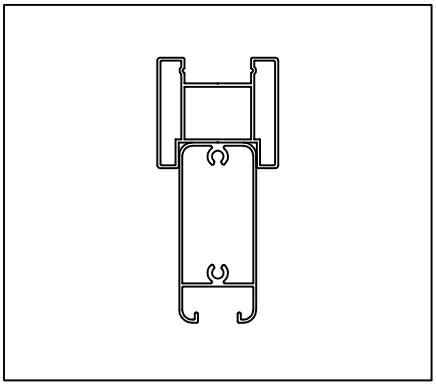

	DO-D14	2
	DO-D14a	2
	DO-H31	12

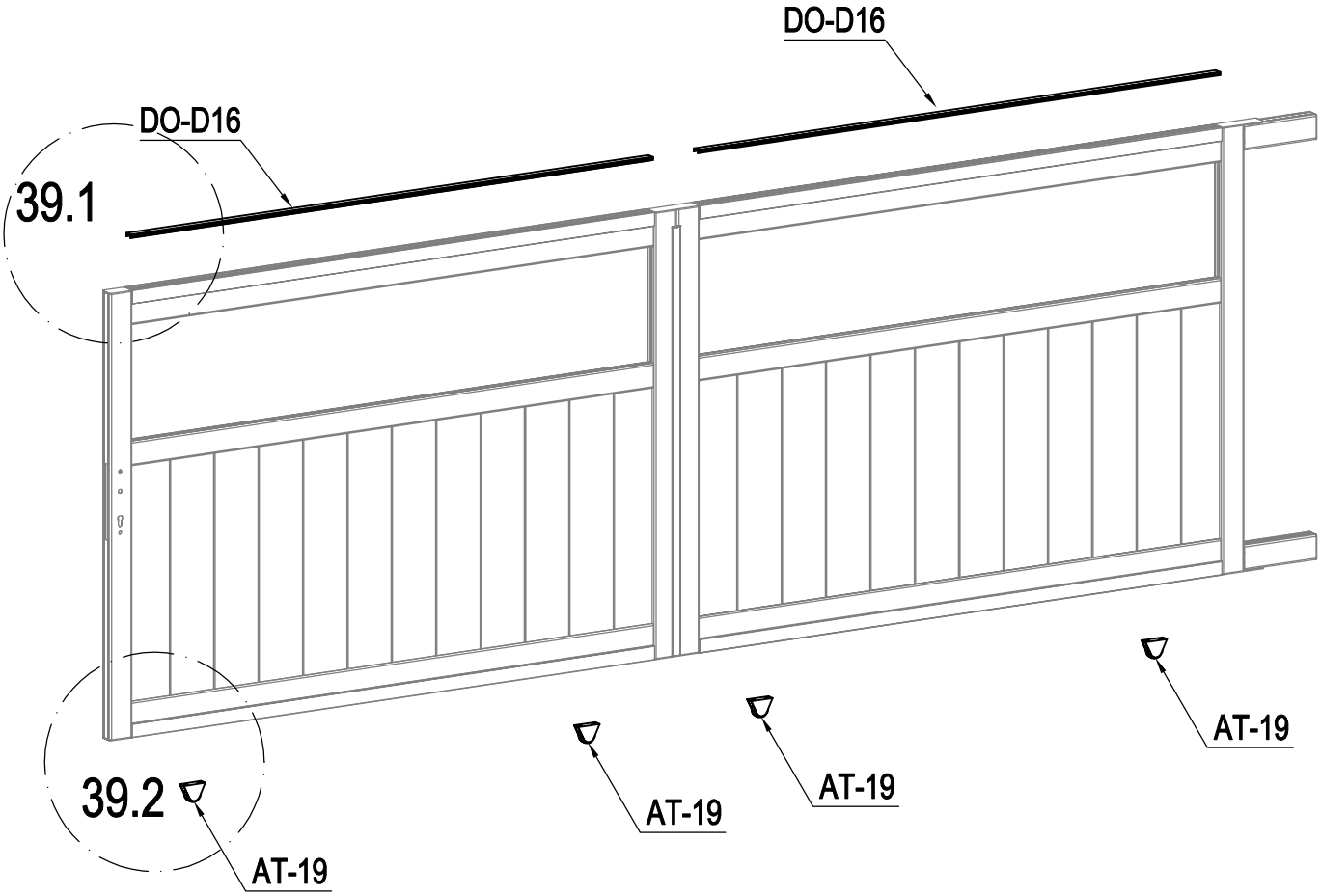

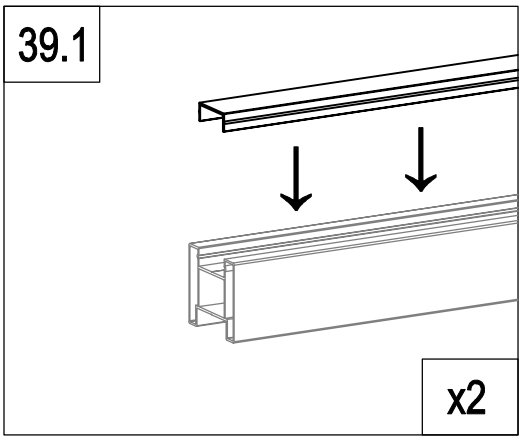

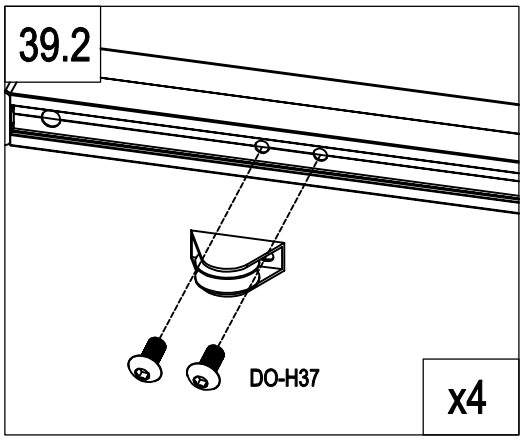

	DO-D16	2
	AT-19	4
	DO-H37	8

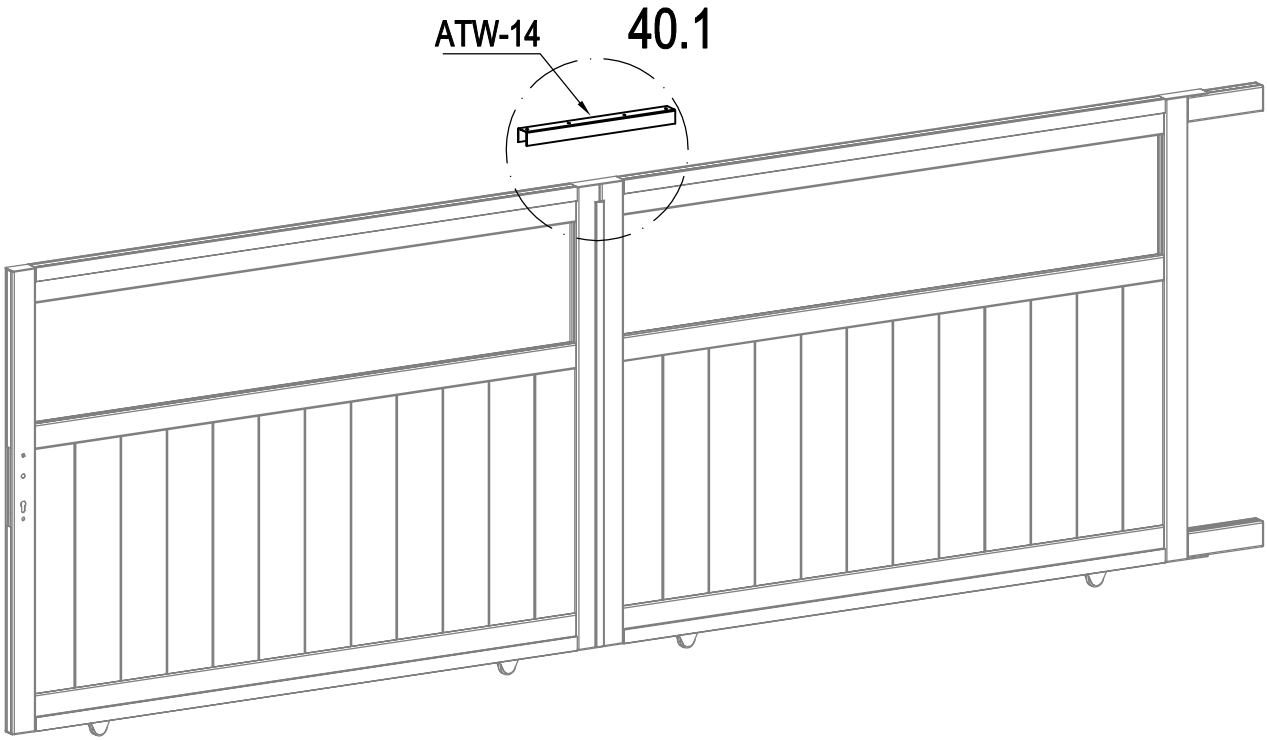

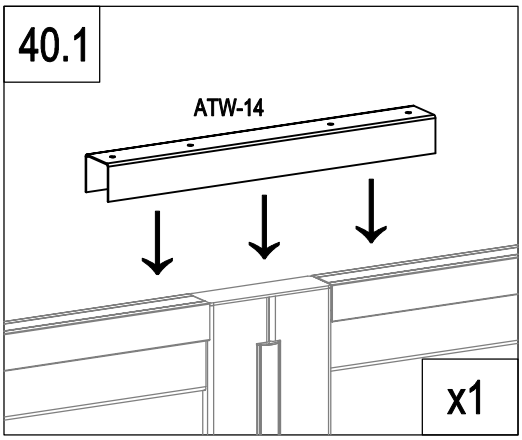

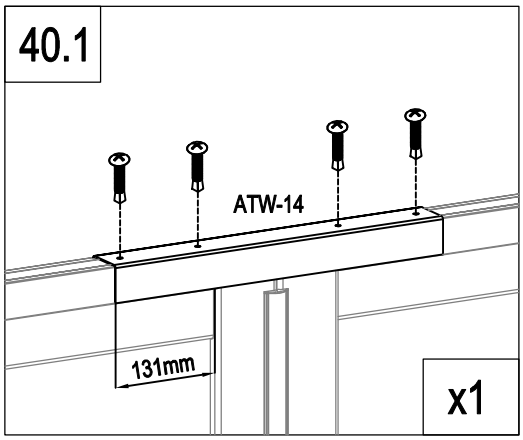

	ATW-14	1
	DO-H32	4

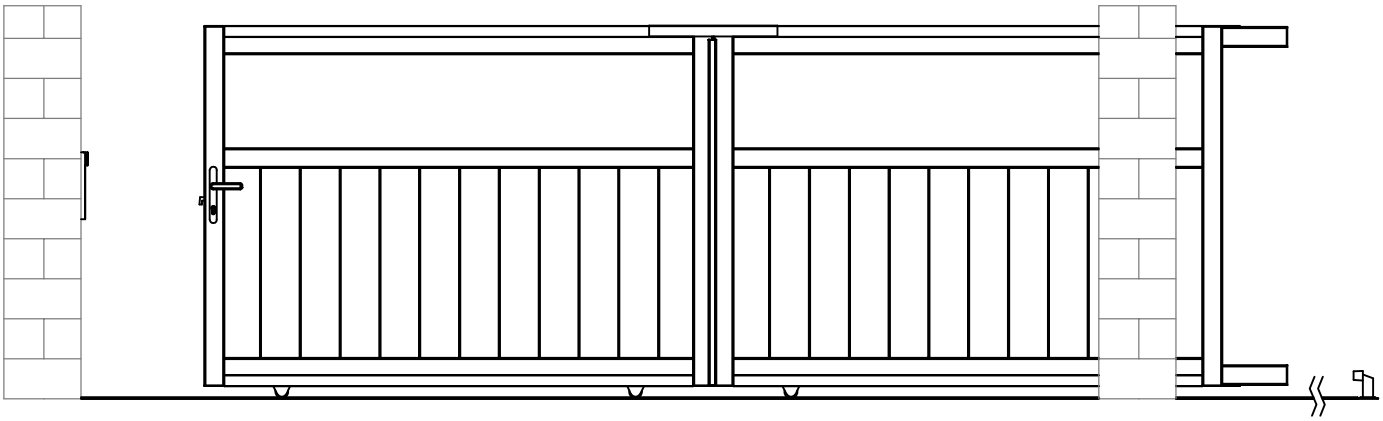

L : P 44~49

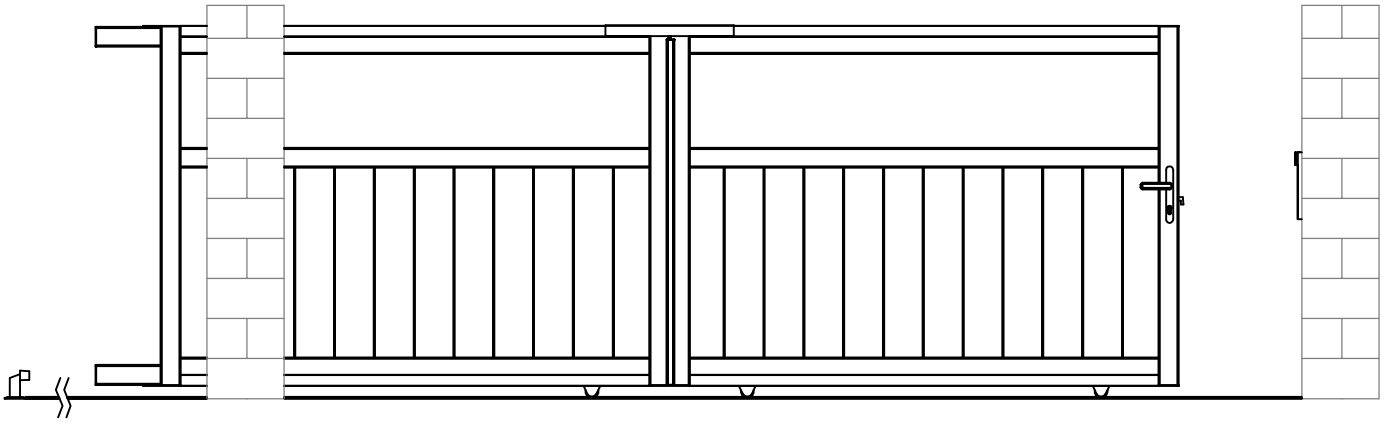

R : P 50~55

L

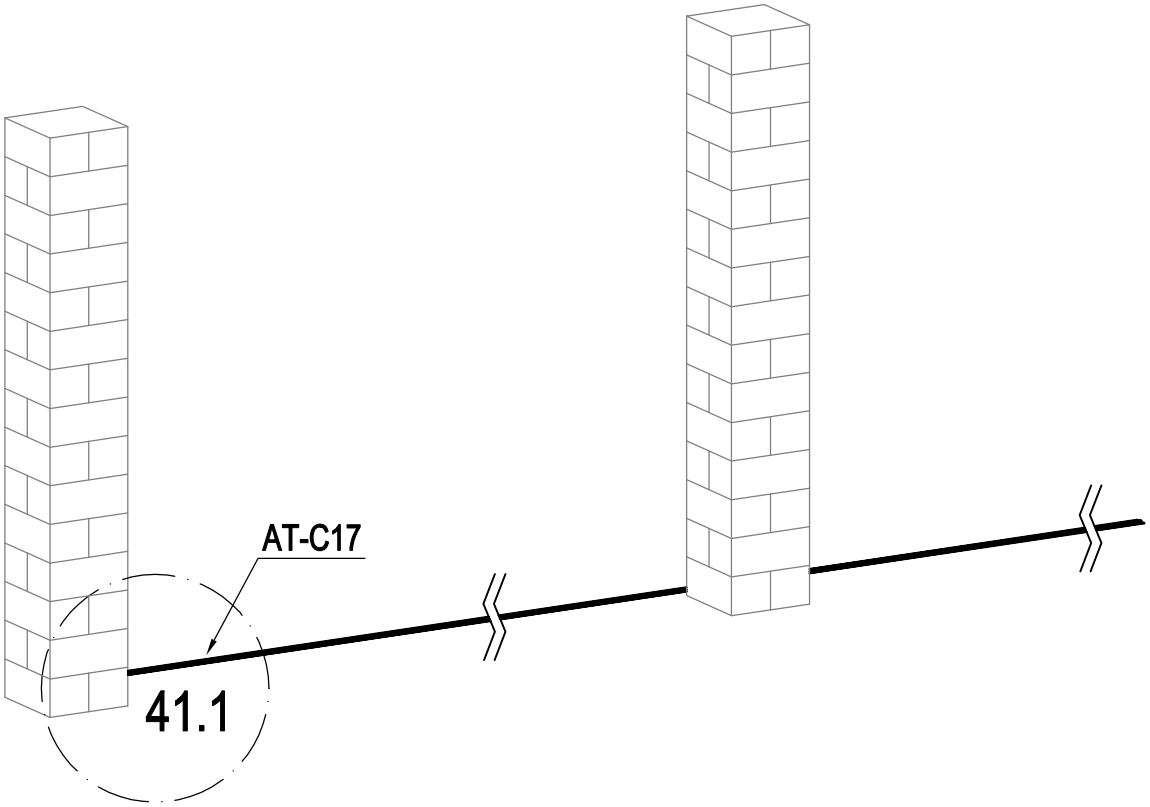

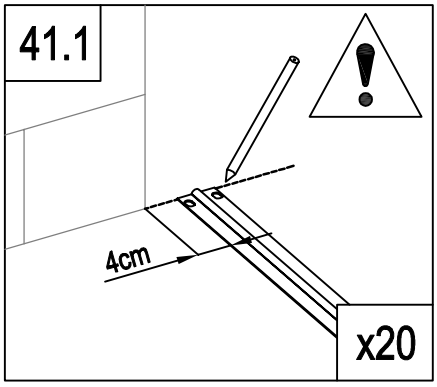

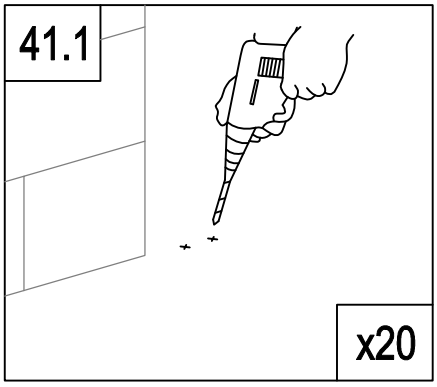

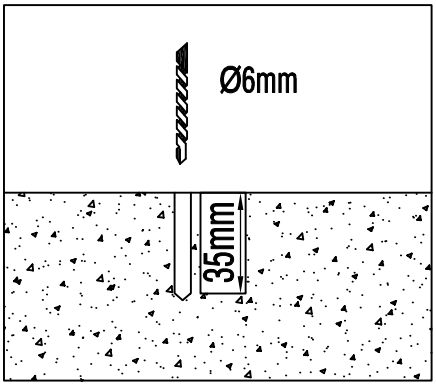

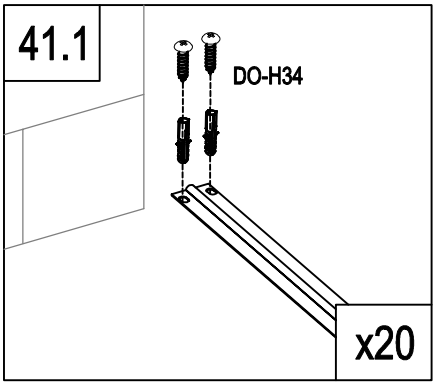

	AT-C17	5
	DO-H34	40

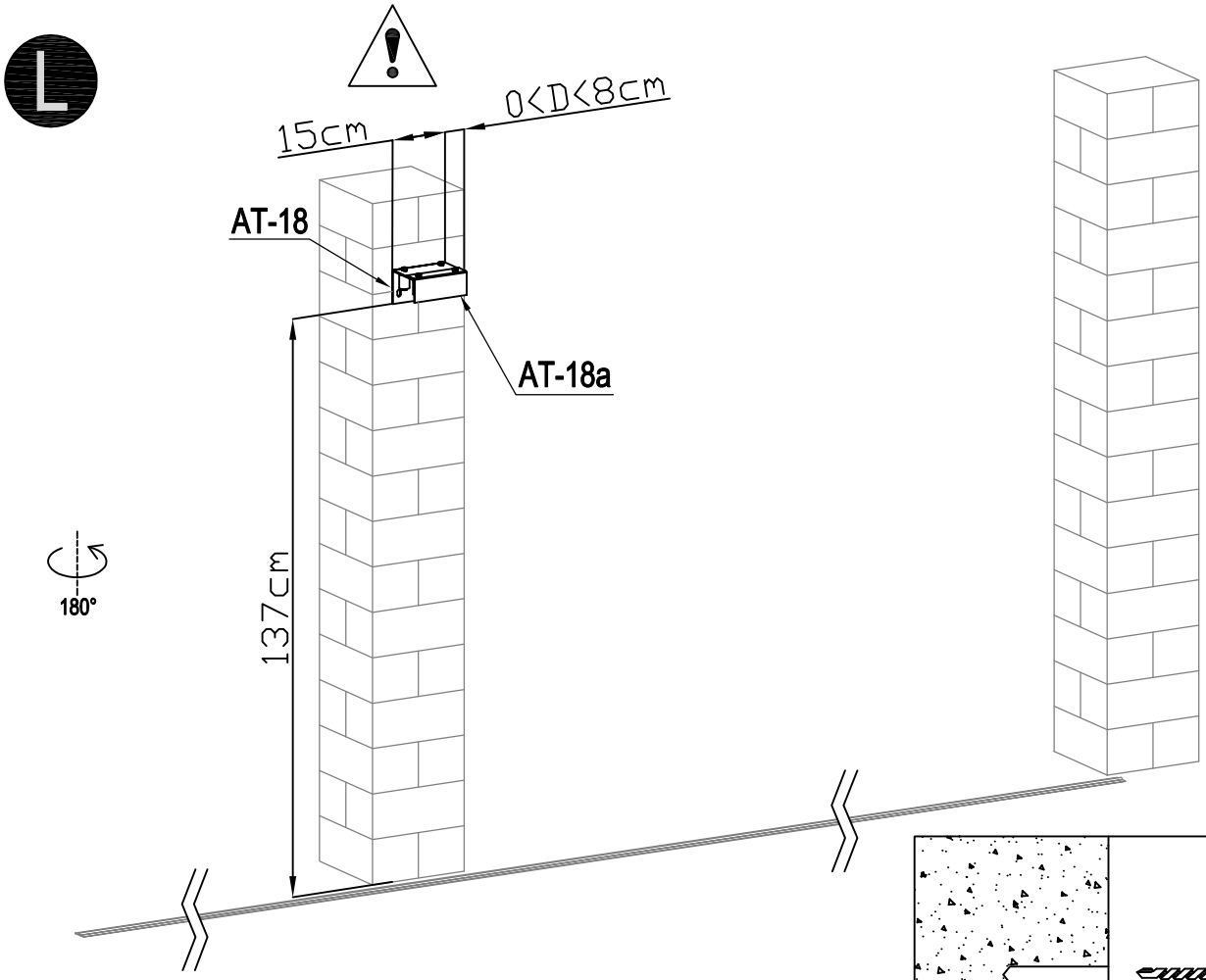

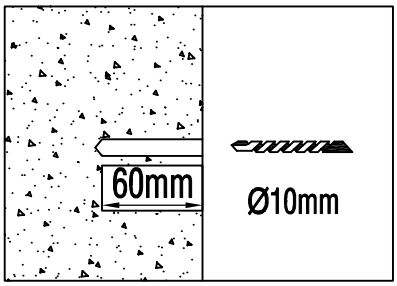

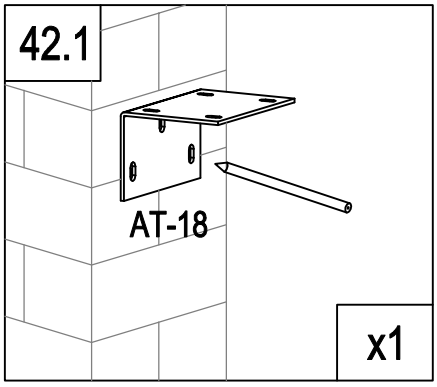

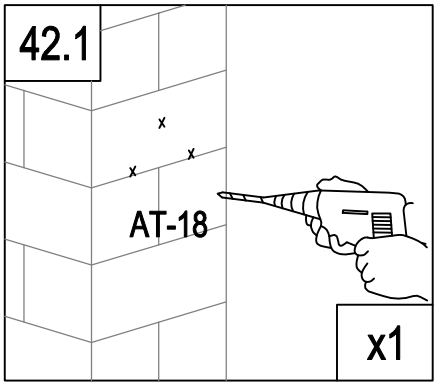

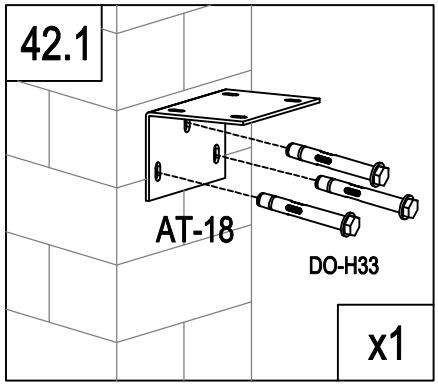

	AT-18	1
	AT-18a	1
	AT-20	4
	DO-H33	3

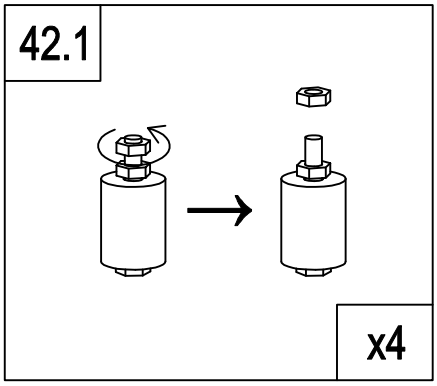

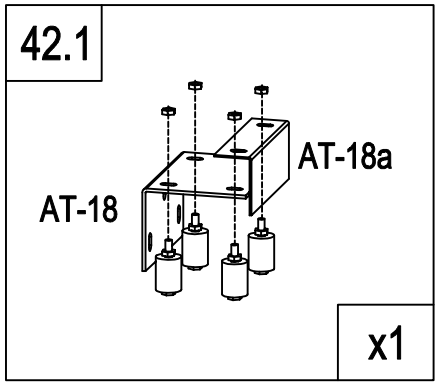

L

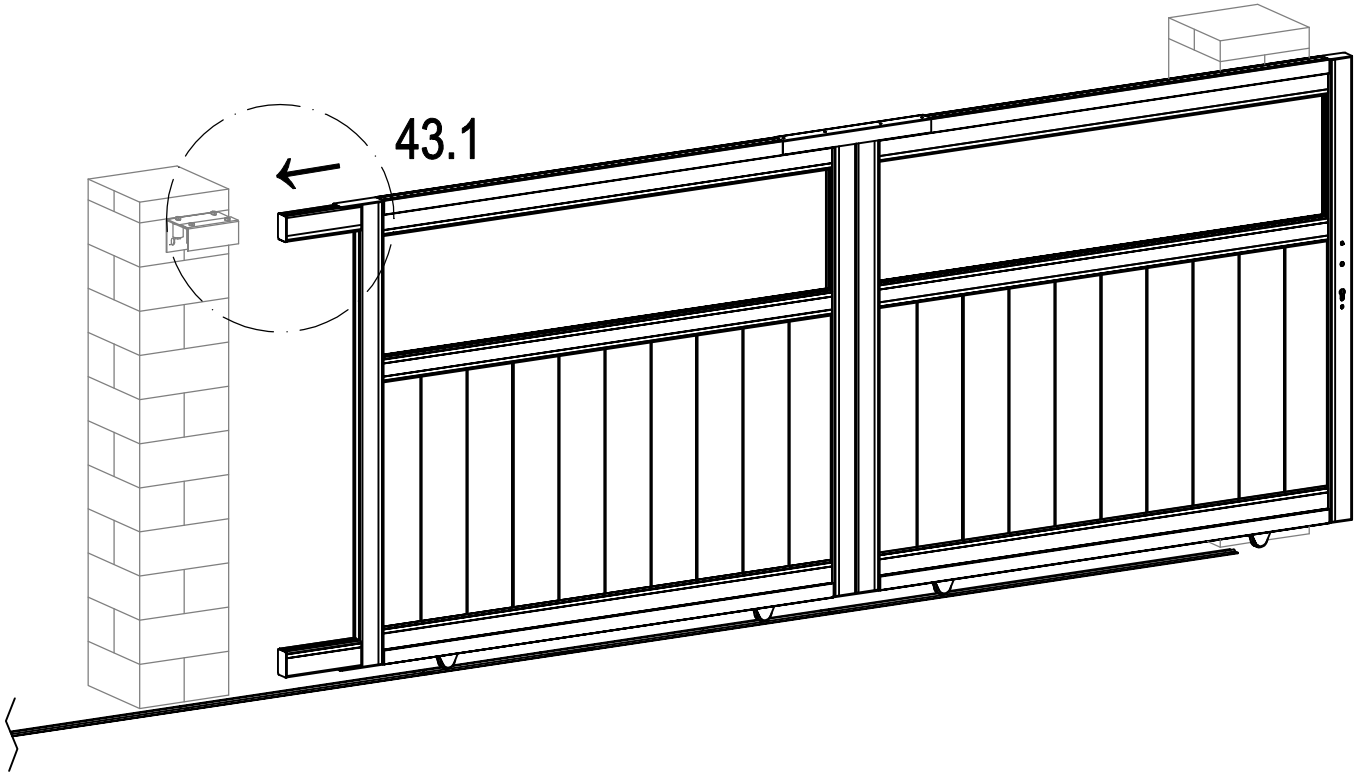

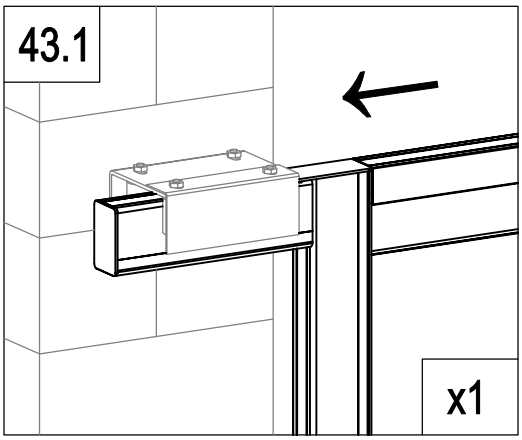

L

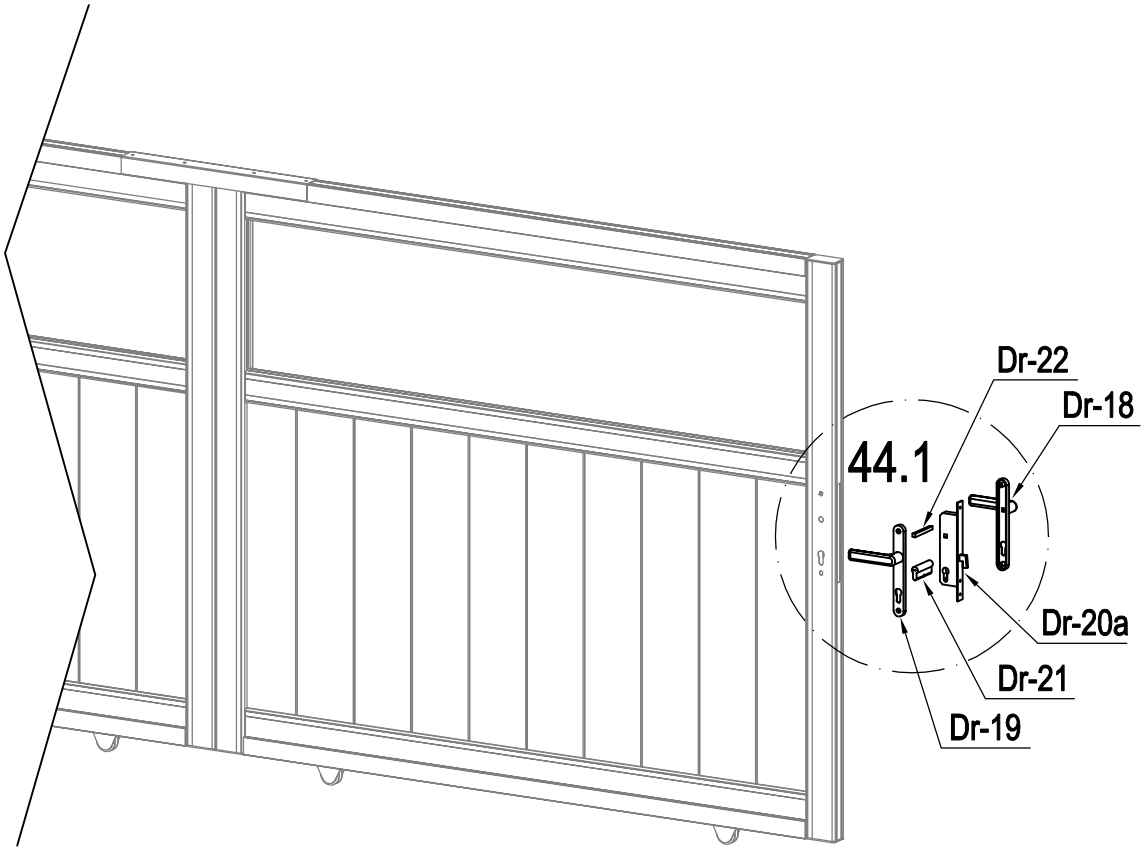

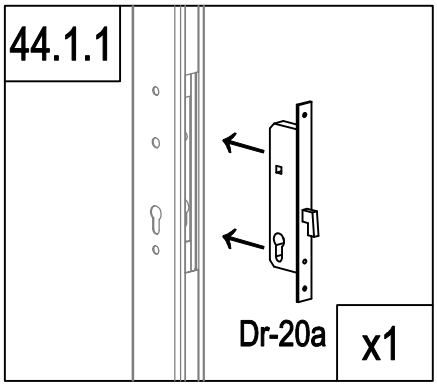

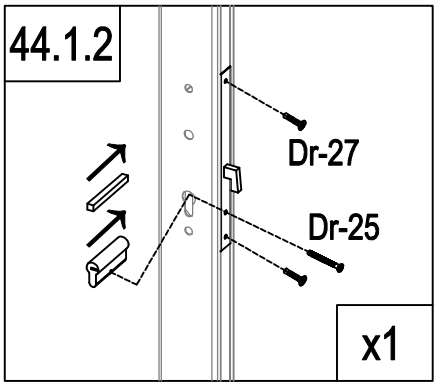

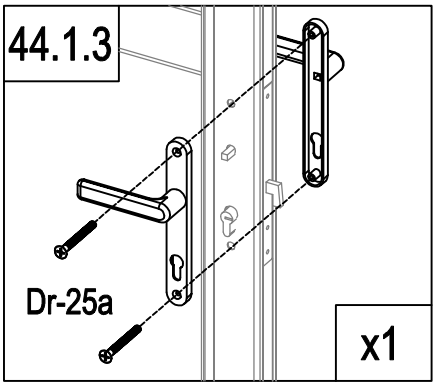

	Dr-20a	1
	Dr-21	1
	Dr-22	1
	Dr-25	1

	Dr-18	1
	Dr-19	1
	Dr-25a	2
	Dr-27	2

L

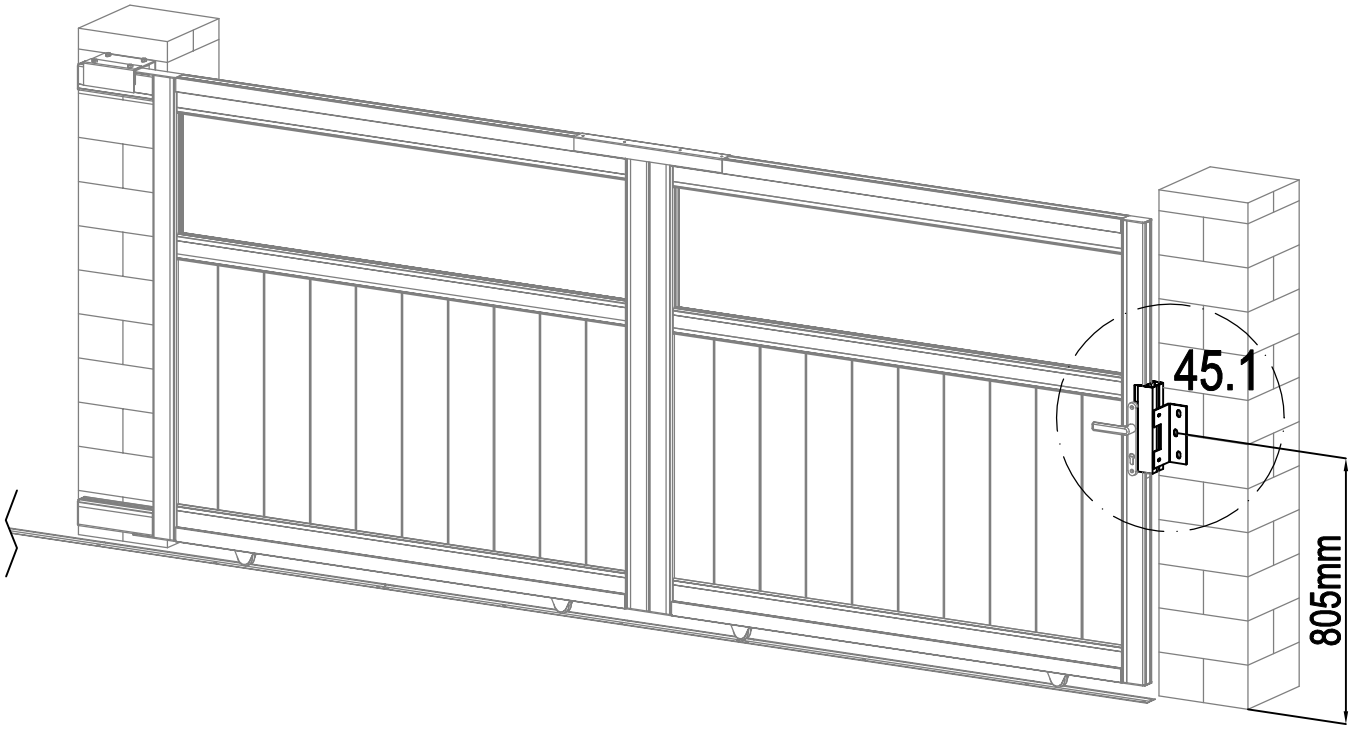

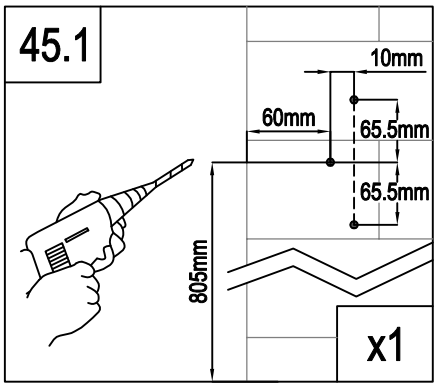

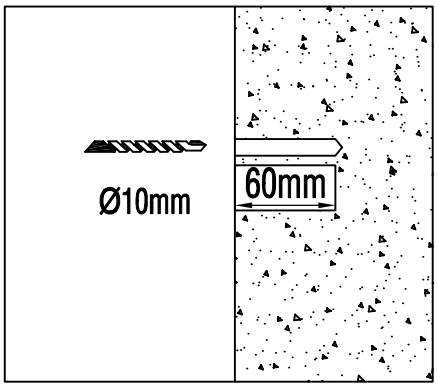

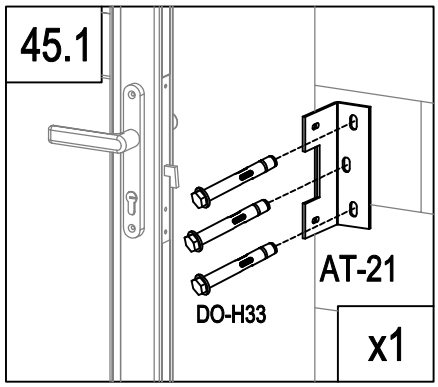

	AT-16	1
	AT-21	1
	DO-H36	2
	DO-H33	3
	AT-22J	3

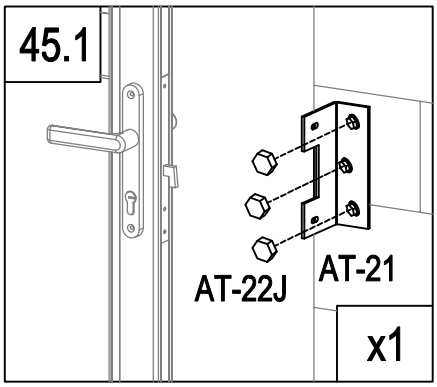

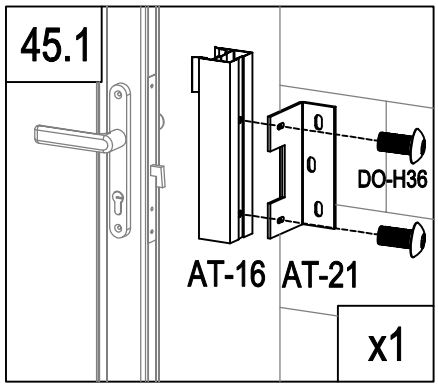

L

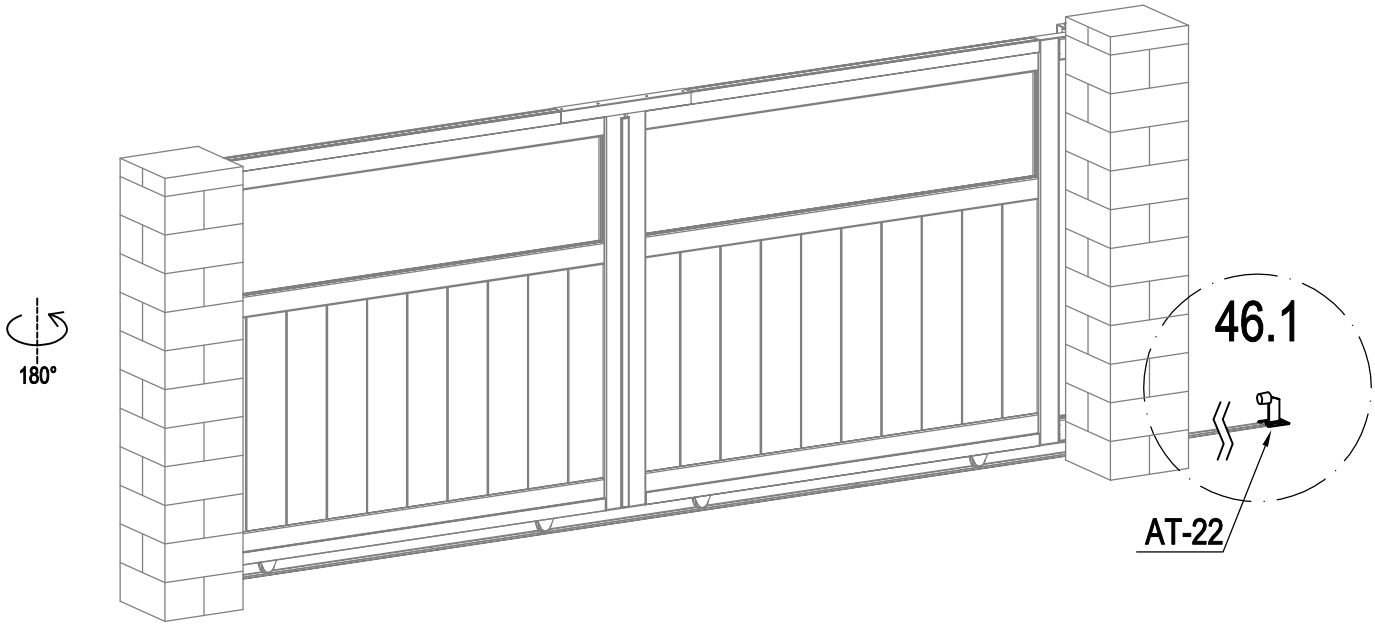

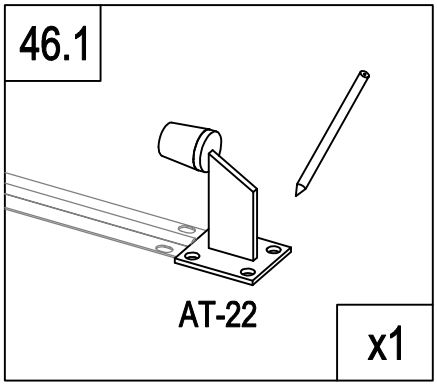

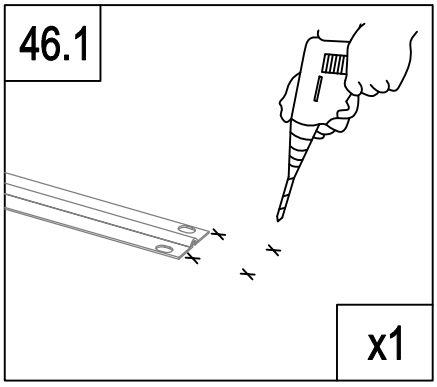

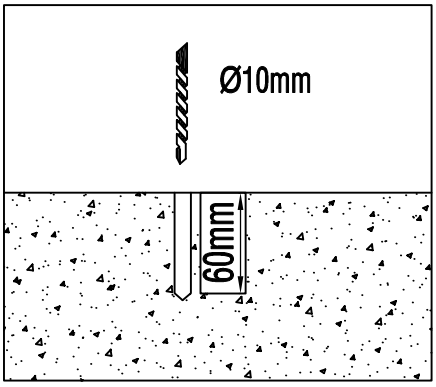

	AT-22	1
	DO-H33	4
	AT-22J	4

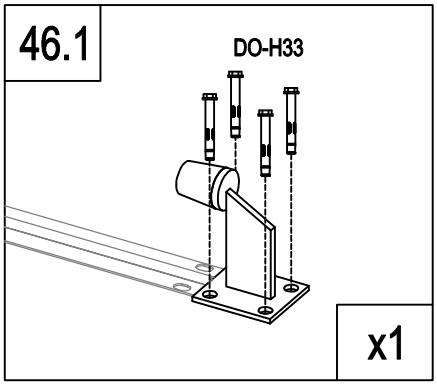

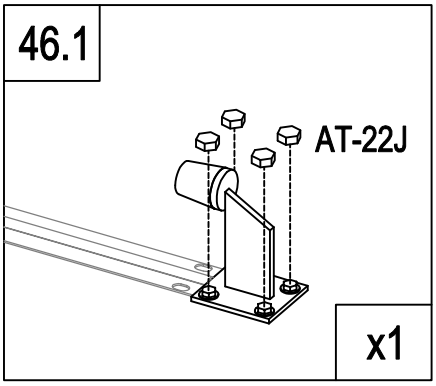

R

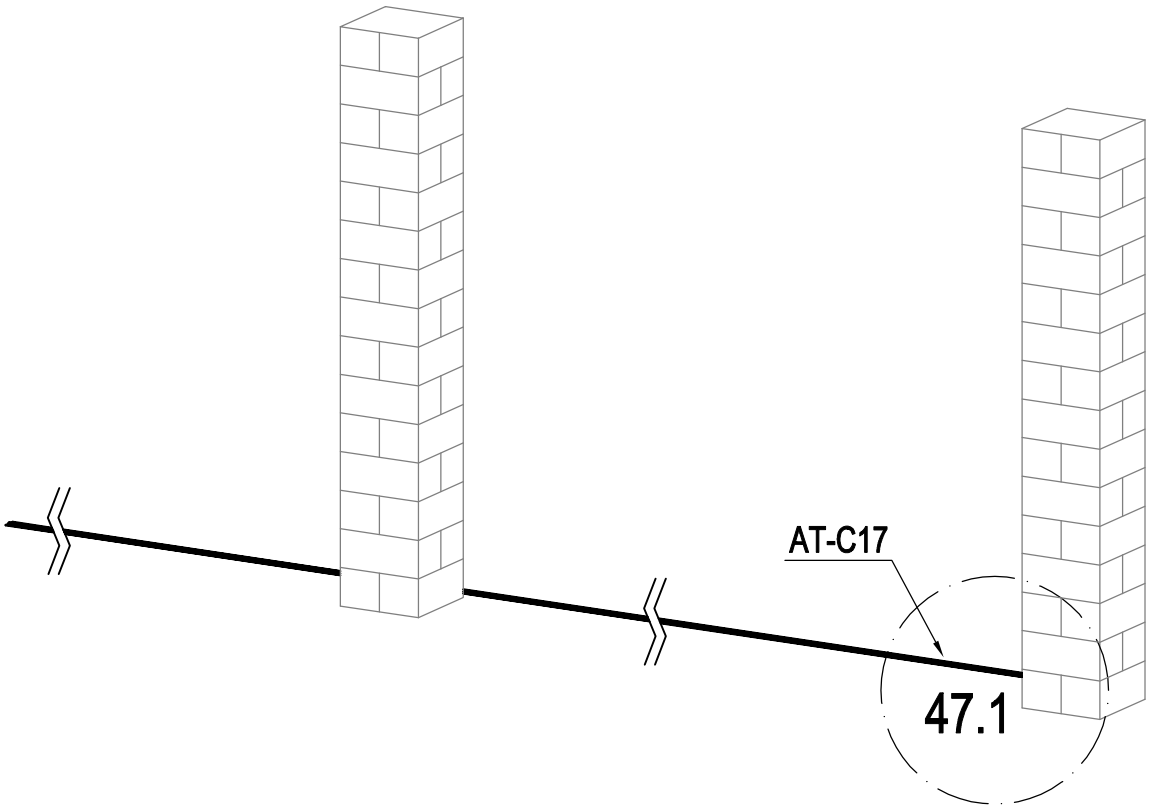

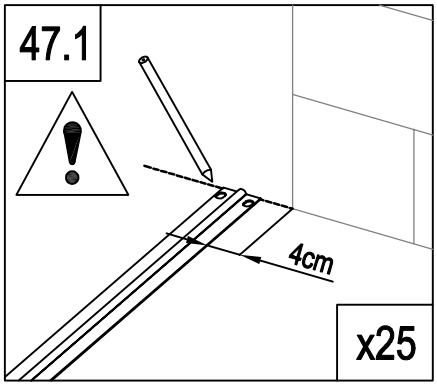

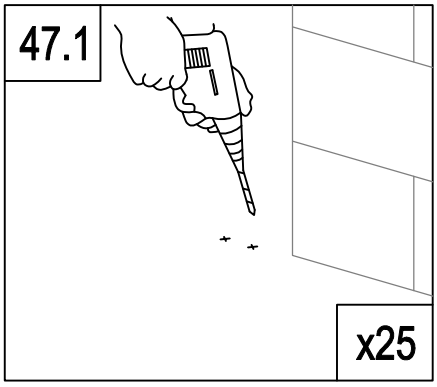

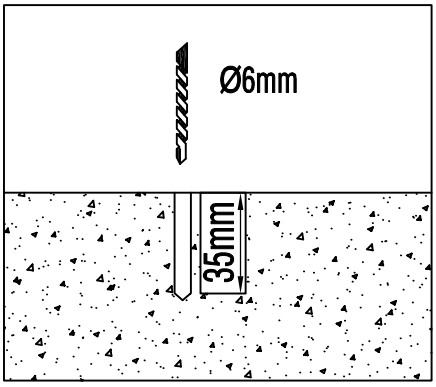

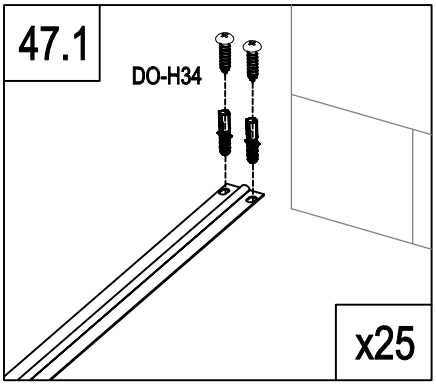

	AT-C17	5
	DO-H34	50

R

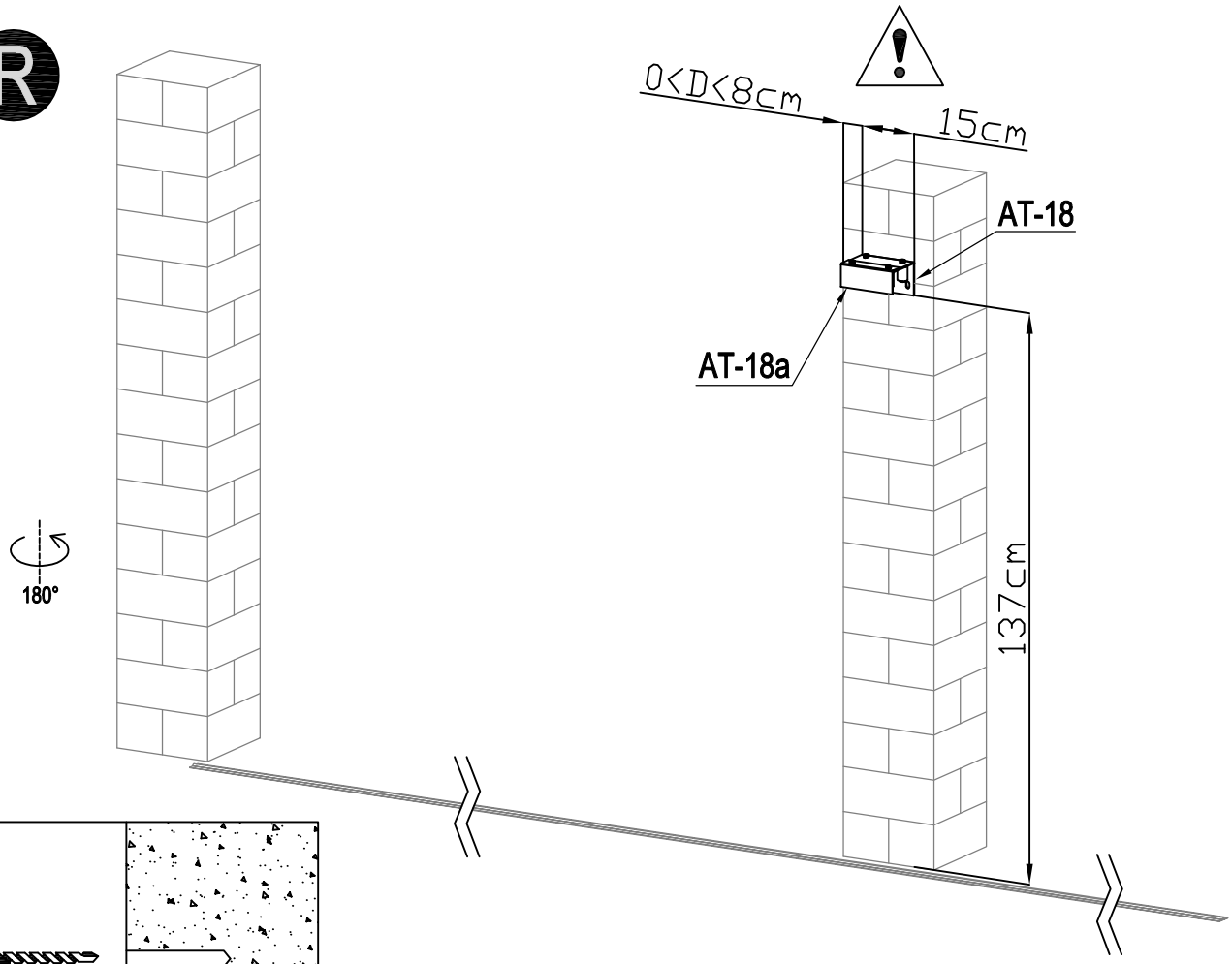

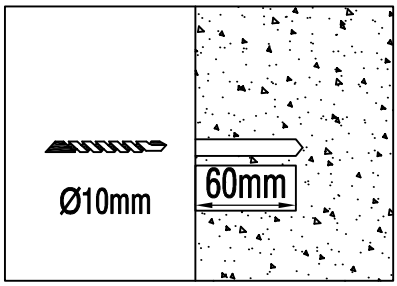

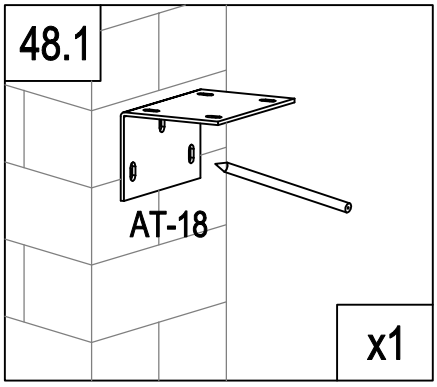

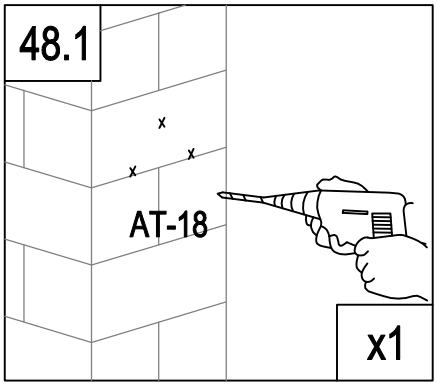

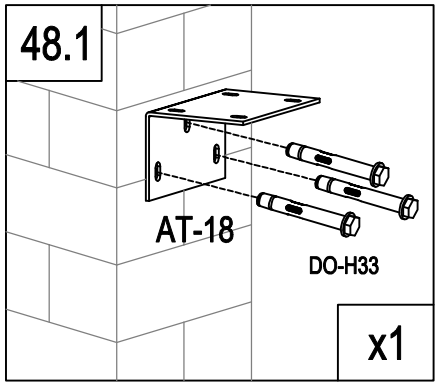

	AT-18	1
	AT-18a	1
	AT-20	4
	DO-H33	3

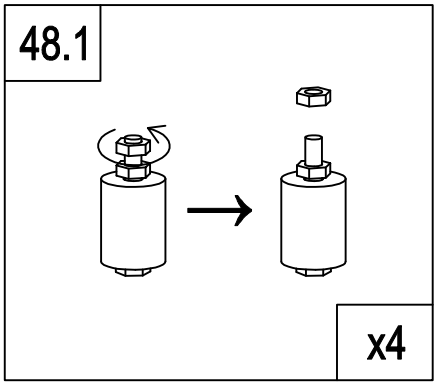

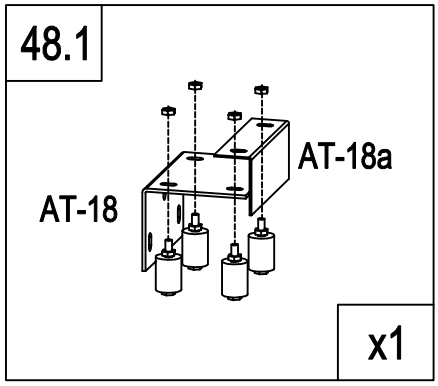

R

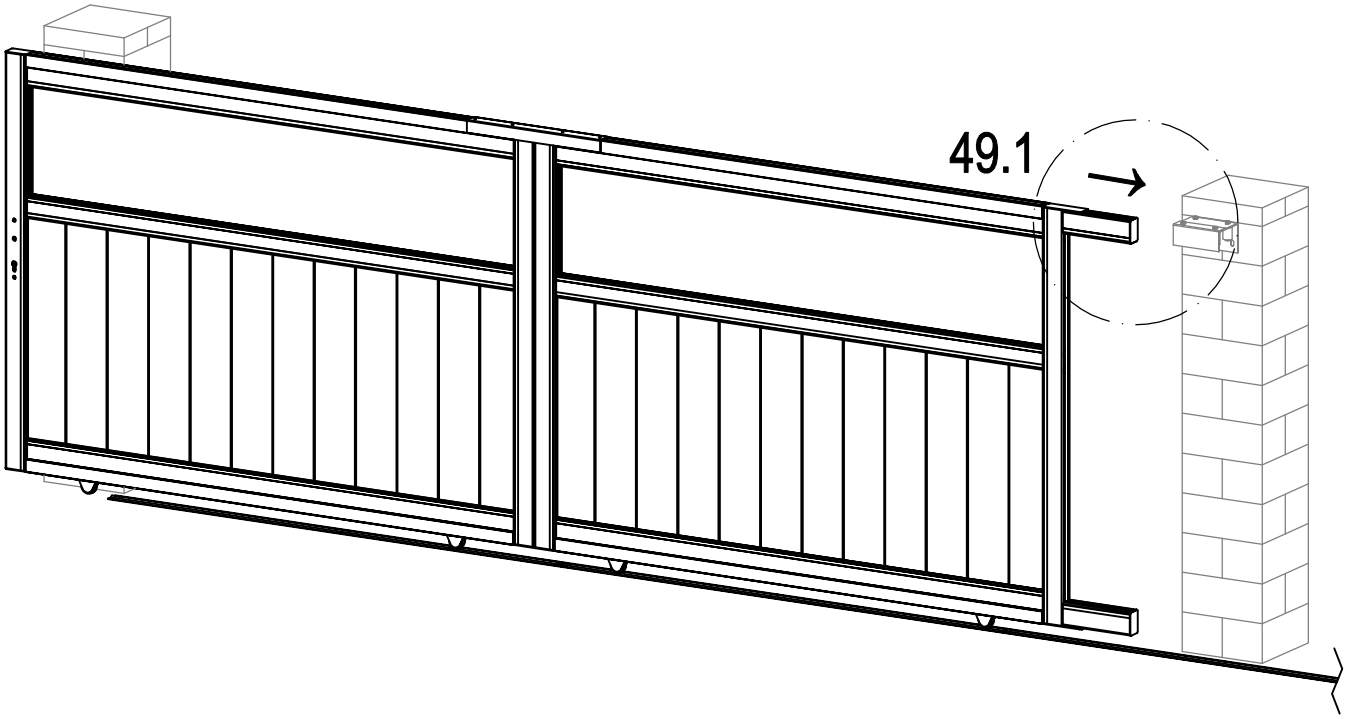

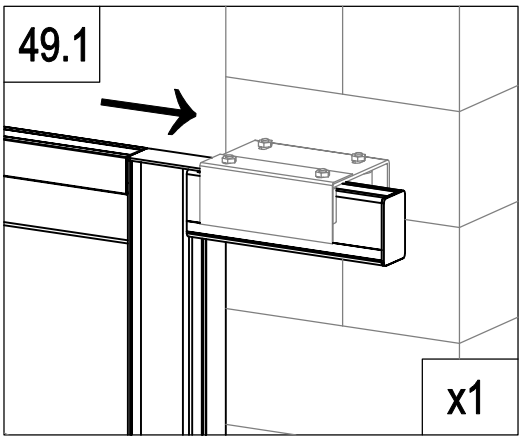

R

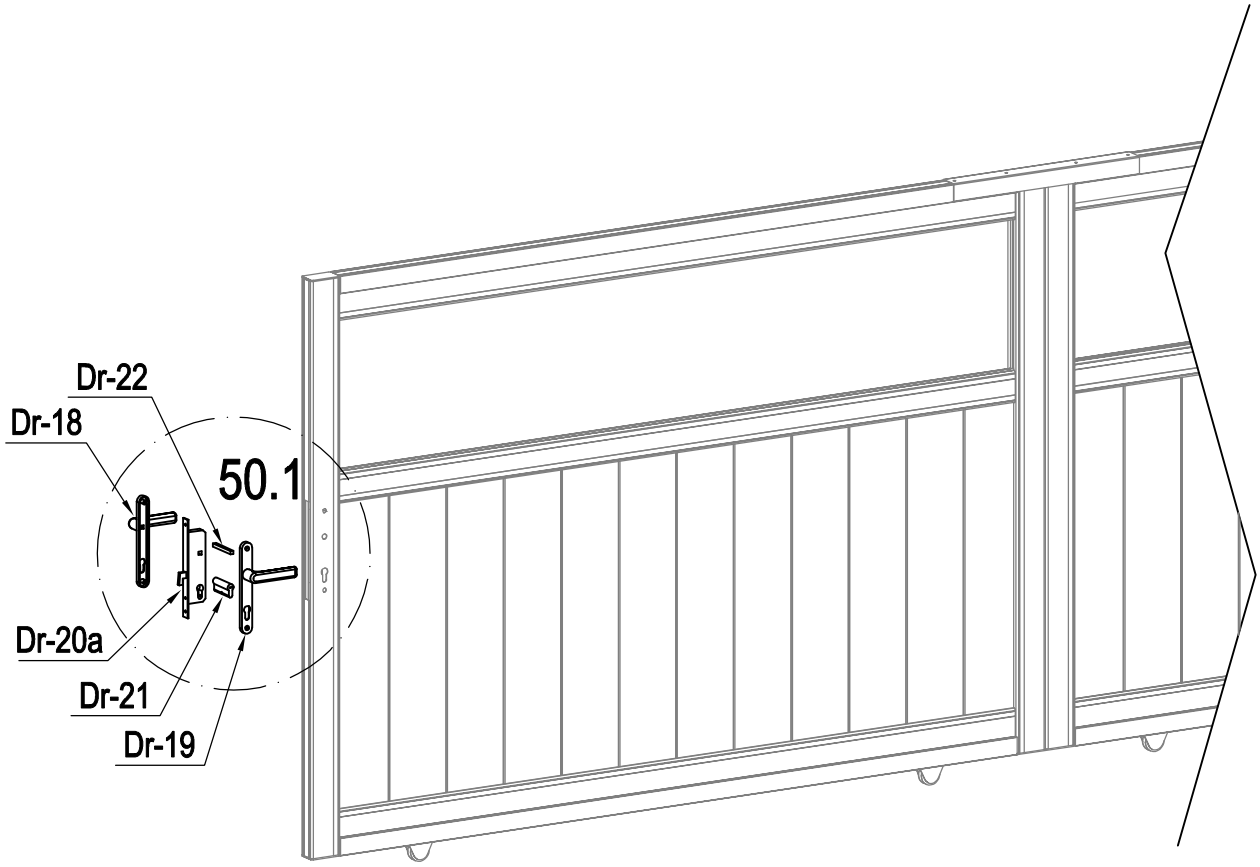

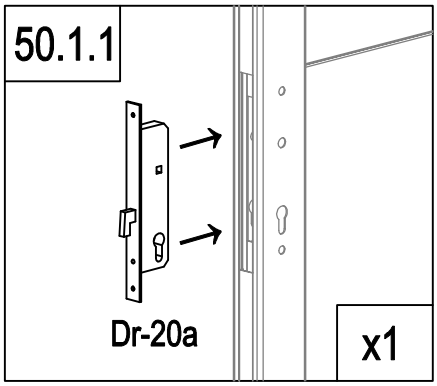

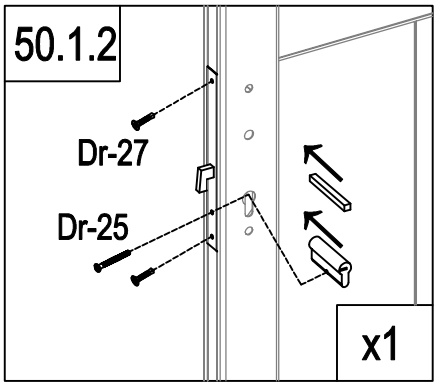

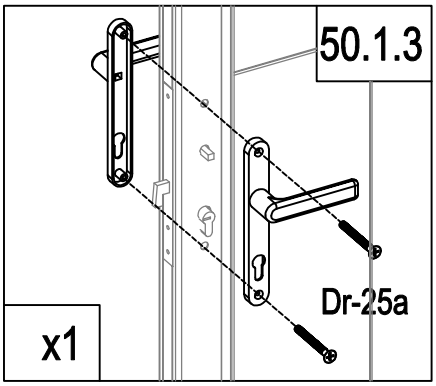

	Dr-20a	1
	Dr-21	1
	Dr-22	1
	Dr-25	1

	Dr-18	1
	Dr-19	1
	Dr-25a	2
	Dr-27	2

R

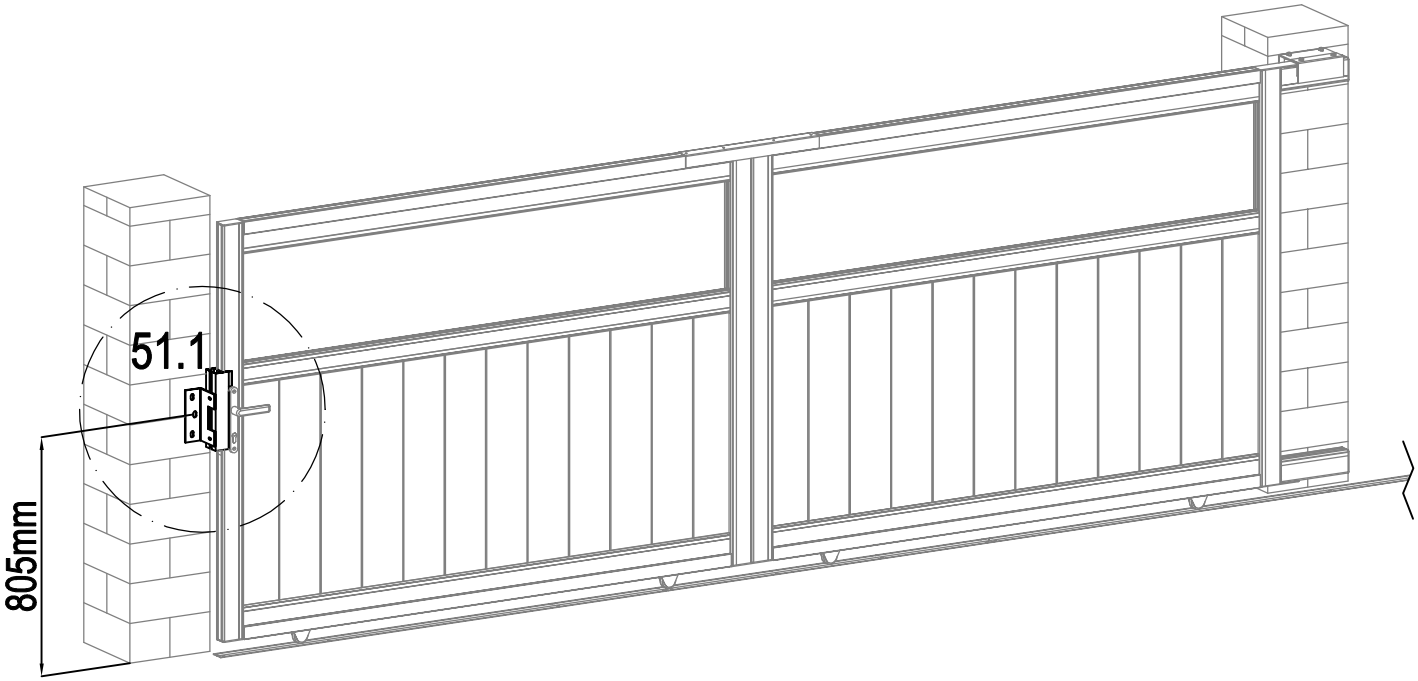

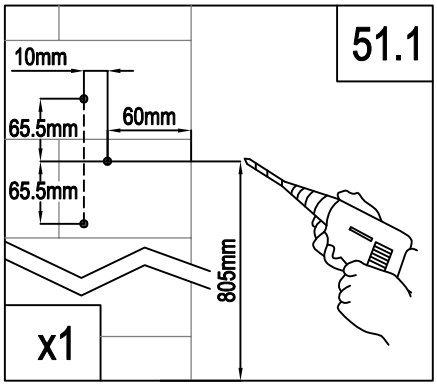

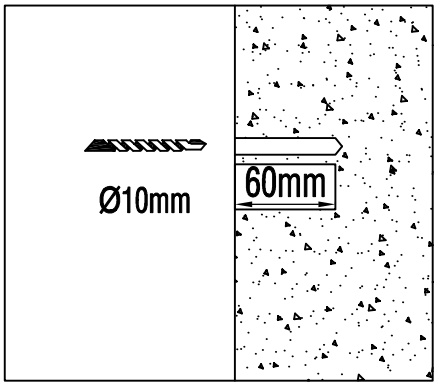

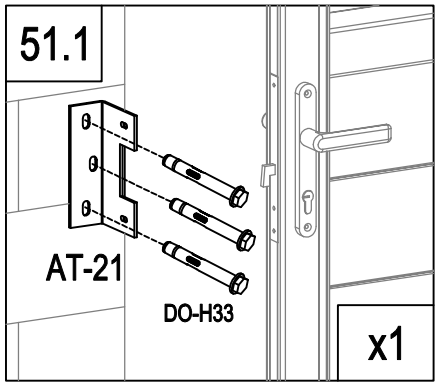

	AT-16	1
	AT-21	1
	DO-H36	2
	DO-H33	3
	AT-22J	3

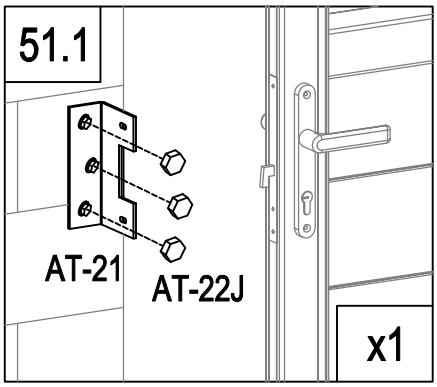

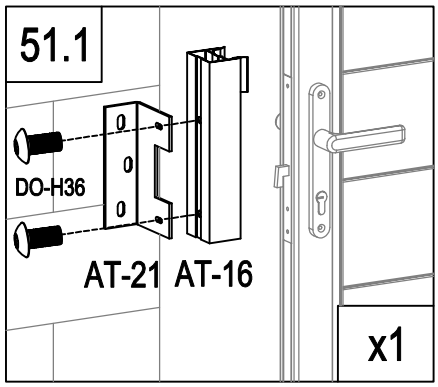

R

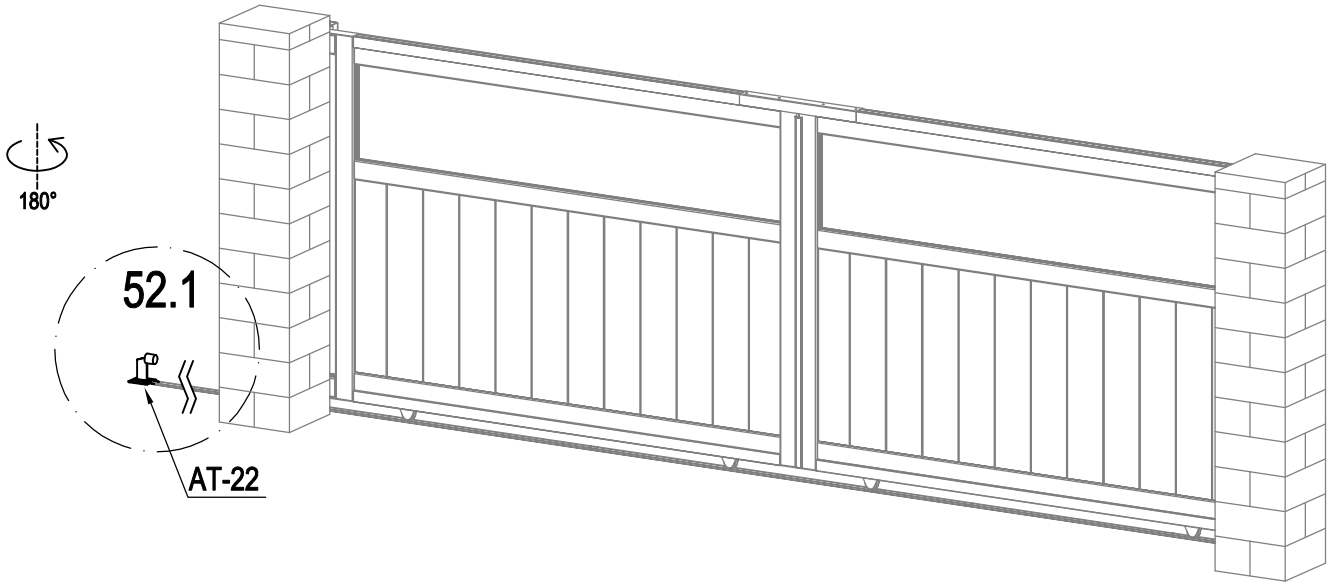

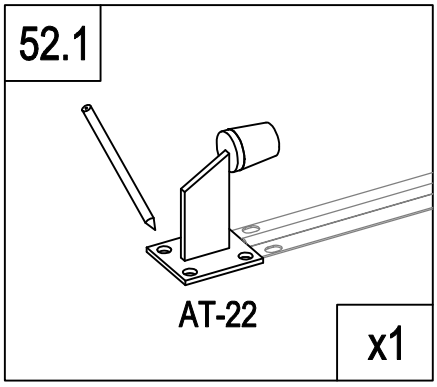

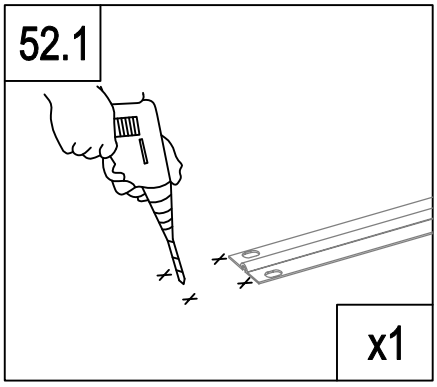

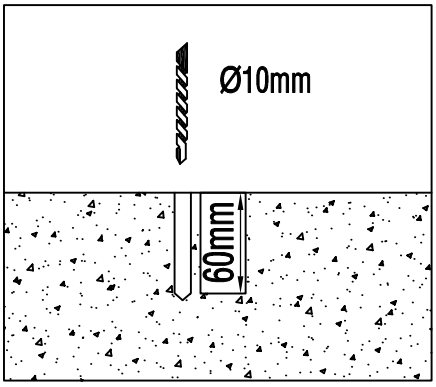
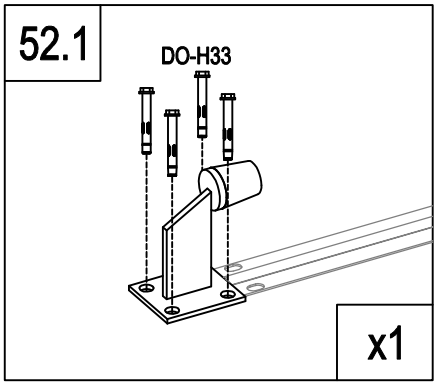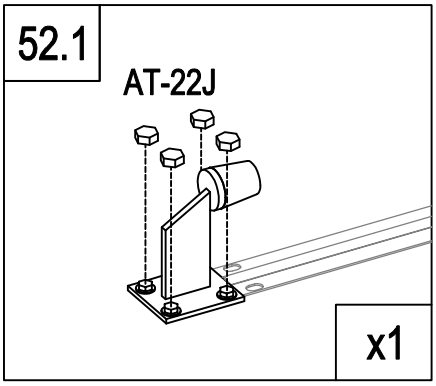
	AT-22	1
	DO-H33	4
	AT-22J	4